# optris CSlaser LT
## TECHNICAL DATA

optris infrared measurements

**Two-wire infrared thermometer for temperature measurement from –30 °C to 1000 °C**

**Features:**

- Temperature range from –30 °C to 1000 °C, measuring spots up from 1.4 mm and response times up from 150 ms
- Single-piece, robust design for easy installation into your process system
- Standard two-wire interface for reliable data transfer and easy integration into a PLC
- Innovative double-laser sighting for exact marking of measurement targets
- Fast sensor parameterisation and real-time measurement via USB
- Dependable in ambient temperatures up to 85 °C without additional cooling



### General specifications

| | |
|---|---|
| Environmental rating | IP 65 (NEMA-4) front mountable<br>at vacuum processes (up to $10^{-3}$ mbar) |
| Ambient temperature | –20 ... 85 °C<br>(50 °C with laser ON) |
| Storage temperature | –40 ... 85 °C |
| Relative humidity | 10 – 95 %, non condensing |
| Vibration | IEC 60068-2-6 (sinus shaped)<br>IEC 60068-2-64 (broadband noise) |
| Shock | IEC 60068-2-27 (25G and 50G) |
| Weight | 600 g |

### Electrical specifications

| | |
|---|---|
| Output / analog | 4 – 20 mA |
| Loop resistance | Max. 1000 Ω[1)] |
| Output / alarm | 0 – 30 V / 500 mA<br>(open collector) |
| Output / digital | Uni-/ bidirectional, 9.6 kBaud,<br>0/3 V Pegel, USB optional |
| Cable length<br>(connector version only) | 3 m / 8 m / 15 m |
| Current draw (laser) | 45 mA at 5 V<br>20 mA at 12 V<br>12 mA at 24 V |
| Power supply | 5 – 30 V DC |

### Measurement specifications

| | |
|---|---|
| Temperature range<br>(scalable via software) | –30 ... 1000 °C |
| Spectral range | 8 – 14 µm |
| Optical resolution<br>(90 % energy) | 50:1 |
| System accuracy<br>(at $T_{amb}$ = 23 ±5 °C) | ±1 % or ±1 °C[2)] |
| Repeatability<br>(at $T_{amb}$ = 23 ±5 °C) | ±0.5 % or ±0.5 °C[2)] |
| Temperature resolution | 0.1 K |
| Response time (90 % signal) | 150 ms |
| Emissivity/ Gain (adjustable via sensor or software) | 0.100 – 1.100 |
| IR window correction<br>(adjustable via software) | 0.100 – 1.000 |
| Signal processing (parameter adjustable via software) | Peak hold, valley hold, average; extended hold function with threshold and hysteresis |
| Software | optris Compact Connect |

*1) In dependence on supply voltage*

*2) Whichever is greater*

Optris GmbH · Ferdinand-Buisson-Str. 14 · 13127 Berlin · Germany
Phone: +49 30 500 197-0 · Fax: +49 30 500 197-10 · E-mail: sales@optris.global · www.optris.global

# optris CSlaser LT

## Optical parameter

SF optics, D:S = 50:1, 24 mm @ 1200 mm

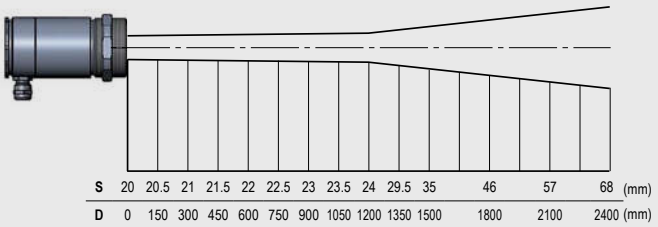


CSlaser LT optics

| | |
|---|---|
| ... SF | 24 mm @ 1200 mm |
| ... CF1 | 1.4 mm @ 70 mm |
| ... CF2 | 3 mm @ 150 mm |
| ... CF3 | 4 mm @ 200 mm |
| ... CF4 | 9 mm @ 450 mm |

## Connections

Analog mode of operation

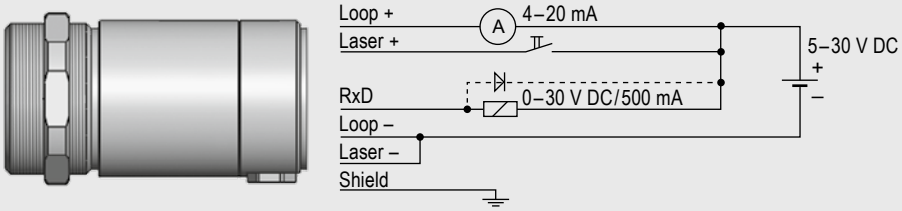


Digital mode of operation

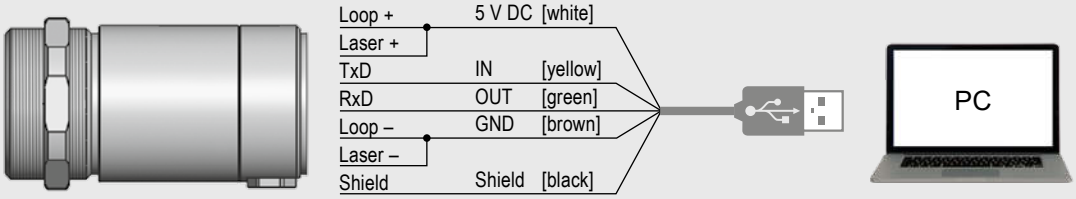


## Dimensions

Dimensions CSlaser LT

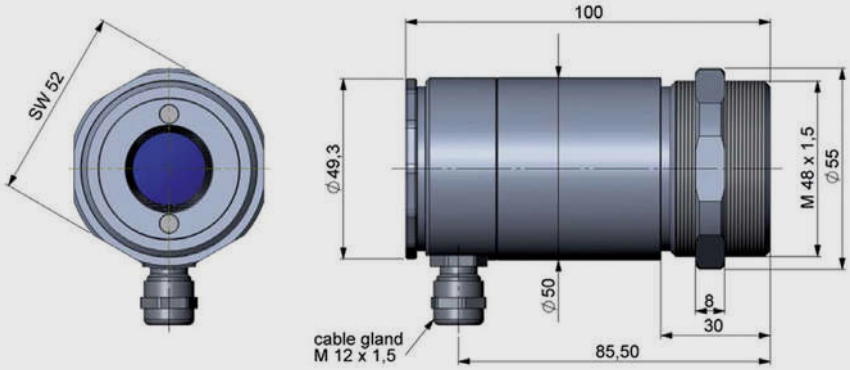


Electrical connections / emissivityadjustment (sensor back side)



Specifications are subject to change without notice · CSlaser LT-EN2018-08-B