DATASHEET - EMT6-DB



Thermistor overload relay for machine protection, 24-240V50/60HZ/DC

Part no.	**EMT6-DB**
Catalog No.	**066167**
Alternate Catalog No.	**EMT6-DB**
EL-Nummer (Norway)	**0004110420**

Delivery program

Product range			EMT6 thermistor overload relay for machine protection
Function			Selector switch with/without manual reset For manual or remote resetting Test button Mains and fault LED display
Rated operational current			
AC-15			
240 V	I_e	A	3
AC--14			
300 V	I_e	A	3
400 V	I_e	A	3
			Value applies starting with release 001.
conventional thermal current	I_{th}	A	6
Rated control voltage	U_s	V	24 - 240 V 50 - 400 Hz 24 - 240 V DC

Notes

Observe manual MN03407006Z-DE/EN.

Can be snap fitted on a top-hat rail to IEC/EN 60715.

Technical data

General

Standards			IEC/EN 60947, VDE 0660, EN 55011
Climatic proofing			Damp heat, constant, to IEC 60068-2-78; Damp heat, cyclic, to IEC 60068-2-30
Ambient temperature			
Open		°C	-25 - +60
Enclosed		°C	- 25 - 45
Storage		°C	- 45 - 85
Mounting position			As required
Weight		kg	0.15
Mechanical shock resistance half-sinusoidal shock 10 ms to IEC 60068-2-27		g	10
Degree of Protection			IP20
Protection against direct contact when actuated from front (EN 50274)			Finger and back-of-hand proof
Safe isolation to EN 61140			
between the contacts		V AC	250
between contacts and power supply		V AC	250

Auxiliary and control circuits

Rated impulse withstand voltage	U_{imp}	V AC	4000
Rated impulse withstand voltage	U_{imp}	V AC	6000
			Value applies starting with release 001.
Overvoltage category/pollution degree			III/3
Terminal capacities Auxiliary and control circuits			
Solid		mm^2	1 x (0.5 - 2.5) 2 x (0.5 - 1.5)
Flexible with ferrule		mm^2	1 x (0.5 - 2.5) 2 x (0.5 - 1.5)
Solid or stranded		AWG	20 - 14
Terminal screw			M3.5

Tightening torque		Nm	1.2
Tools			
Pozidriv screwdriver		Size	2
Standard screwdriver		mm	1 x 6

Auxiliary power circuit

Rated insulation voltage	U_i	V	300
Rated insulation voltage	U_i	V	400
			Value applies starting with release 001.
Rated operational current	I_e	A	
AC--14			
Make contact			
300 V	I_e	A	3
380 V 400 V 415 V	I_e	A	3
			Value applies starting with release 001.
Break contact			
300 V	I_e	A	3
380 V 400 V 415 V	I_e	A	3
			Value applies starting with release 001.
AC-15			
Make contact			
220 V 230 V 240 V	I_e	A	3
300 V	I_e	A	1
380 V 400 V 415 V	I_e	A	1
			Value applies starting with release 001.
Break contact			
220 V 230 V 240 V	I_e	A	3
300 V	I_e	A	1
380 V 400 V 415 V	I_e	A	1
			Value applies starting with release 001.
Max. short-circuit protective device			
Fuse	gG/gL	A	6

Control circuit

Rated insulation voltage	U_i	V	240
Rated operational voltage	U_e	V	240
Pick-up and drop-out values		x U_e	0.85 - 1.1
Power consumption			
AC		VA	3.5
DC		W	2
Trip at approx.		Ω	3600
Recovery at approx.		Ω	1600
Sensor circuit			Sensor circuit parameters at U_S and +20 °C: max. Cable length to sensor 250m (not insulated) Total cold resistance $\sum R_K \leq 1500\ \Omega$ - $R_{T1\text{-}T2}$ (T1, T2 shorted): $I_{T1\text{-}T2}$ = 1.9 mA - $R_{T1\text{-}T2}$ (4 kΩ): $U_{T1\text{-}T2}$ = max. 3 V DC, $I_{T1\text{-}T2}$ = max. 0.8 mA - $R_{T1\text{-}T2}$ (T1, T2 open): $U_{T1\text{-}T2}$ = 5.1 V DC typ. (5.5 V DC max.)

Electromagnetic compatibility (EMC)

Electrostatic discharge (ESD)			
applied standard			IEC/EN 61000-4-2
Air discharge		kV	8
Contact discharge		kV	6
Electromagnetic fields (RFI)			
applied standard			IEC/EN 61000-4-3
		V/m	80 - 1000 MHz: 10 1.4 - 2 GHz: 3 2.0 - 2.7 GHz: 1
Radio interference suppression			EN 55011 Class B

Burst		kV	Supply cables: 2 Signal cables: 1 according to IEC/EN 61000-4-4
power pulses (Surge)			2 kV (symmetrical) 4 kV (asymmetrical) according to IEC/EN 61000-4-5
Immunity to line-conducted interference to (IEC/EN 61000-4-6)		V	10

Design verification as per IEC/EN 61439

Technical data for design verification			
Rated operational current for specified heat dissipation	I_n	A	0
Heat dissipation per pole, current-dependent	P_{vid}	W	0
Equipment heat dissipation, current-dependent	P_{vid}	W	0
Static heat dissipation, non-current-dependent	P_{vs}	W	0.8
Heat dissipation capacity	P_{diss}	W	0
Operating ambient temperature min.		°C	-25
Operating ambient temperature max.		°C	60

Technical data ETIM 7.0

Relays (EG000019) / Temperature monitoring relay (EC001446)

Electric engineering, automation, process control engineering / Low-voltage switch technology / Monitoring equipment (low-voltage switch technology) / Temperature monitoring equipment (ecl@ss10.0.1-27-37-18-10 [AKF104014])

Type of electric connection			Screw connection
Rated control supply voltage Us at AC 50HZ		V	24 - 240
Rated control supply voltage Us at AC 60HZ		V	24 - 240
Rated control supply voltage Us at DC		V	24 - 240
Voltage type for actuating			AC/DC
With detachable clamps			No
Number of measuring circuits			1
Error registration possible			No
External reset possible			Yes
Number of contacts as normally closed contact			1
Number of contacts as normally open contact			1
Number of contacts as change-over contact			0
Temperature measuring range		°C	0 - 0
Resistance measuring range		Ohm	750 - 12000
Width		mm	23
Height		mm	84
Depth		mm	104

Approvals

Product Standards			UL 508; CSA-C22.2 No. 14; IEC/EN 60947-8; CE marking
UL File No.			E29184
UL Category Control No.			NKCR
CSA File No.			12528
CSA Class No.			3211-03
North America Certification			UL listed, CSA certified
Specially designed for North America			No
Max. Voltage Rating			600 V AC
Degree of Protection			IEC: IP20, UL/CSA Type: -

Characteristics

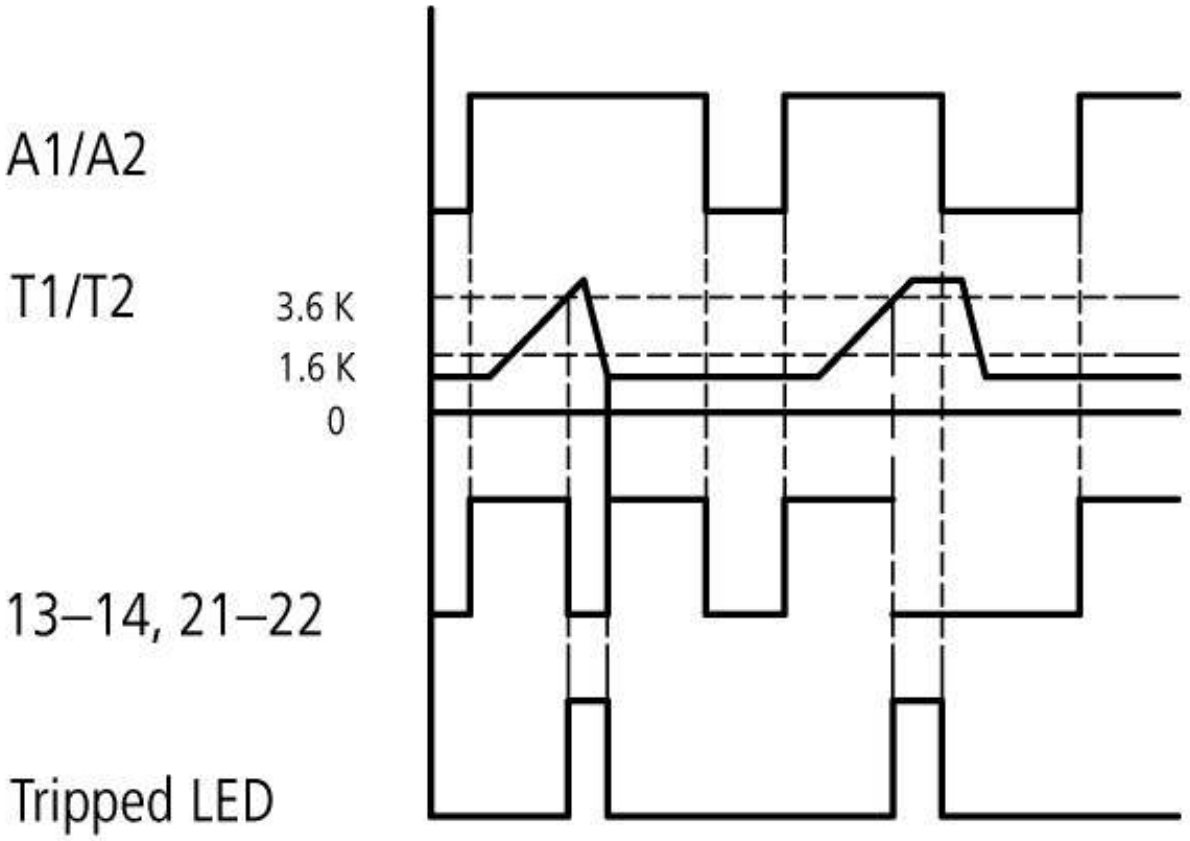

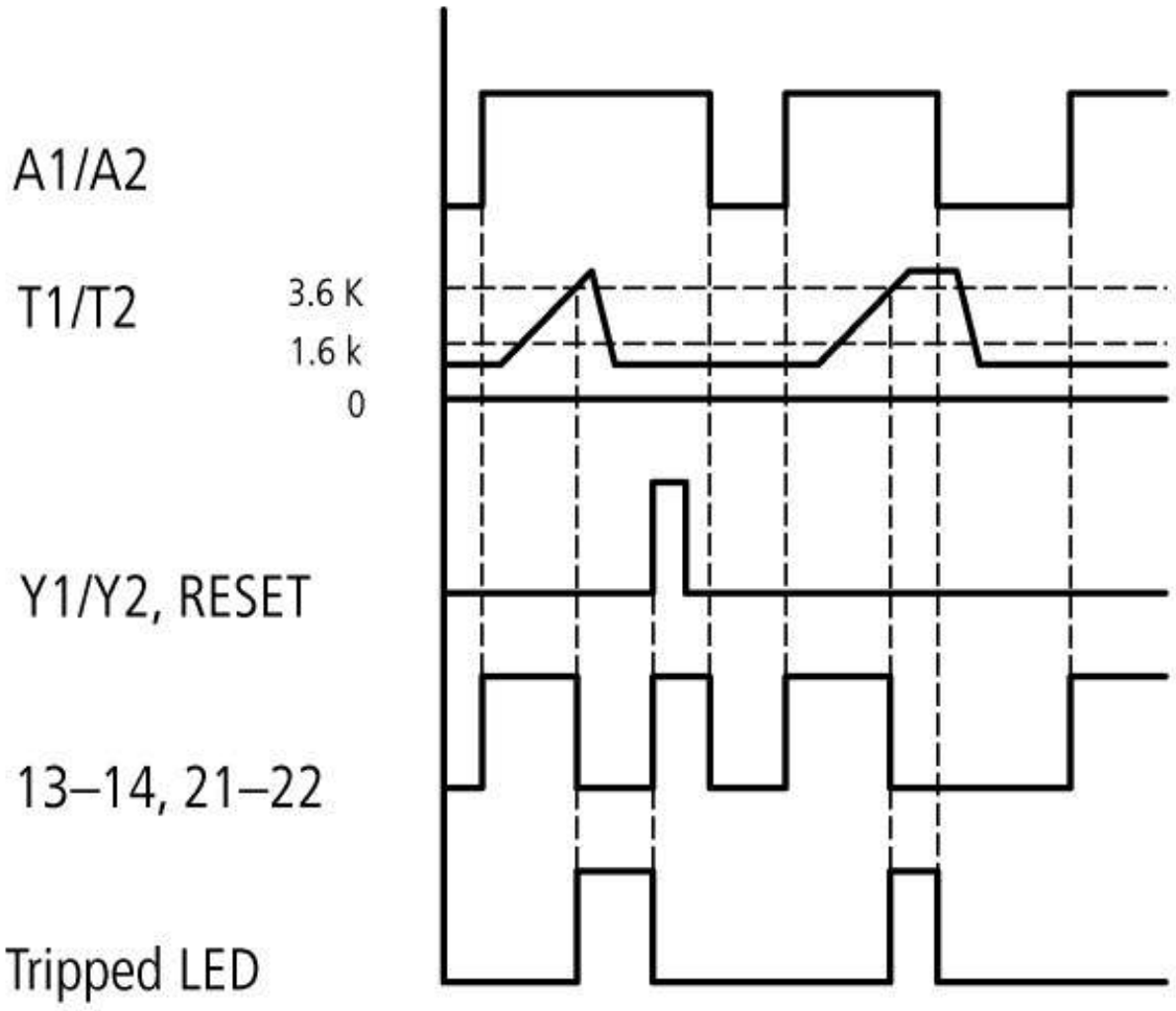

Dimensions

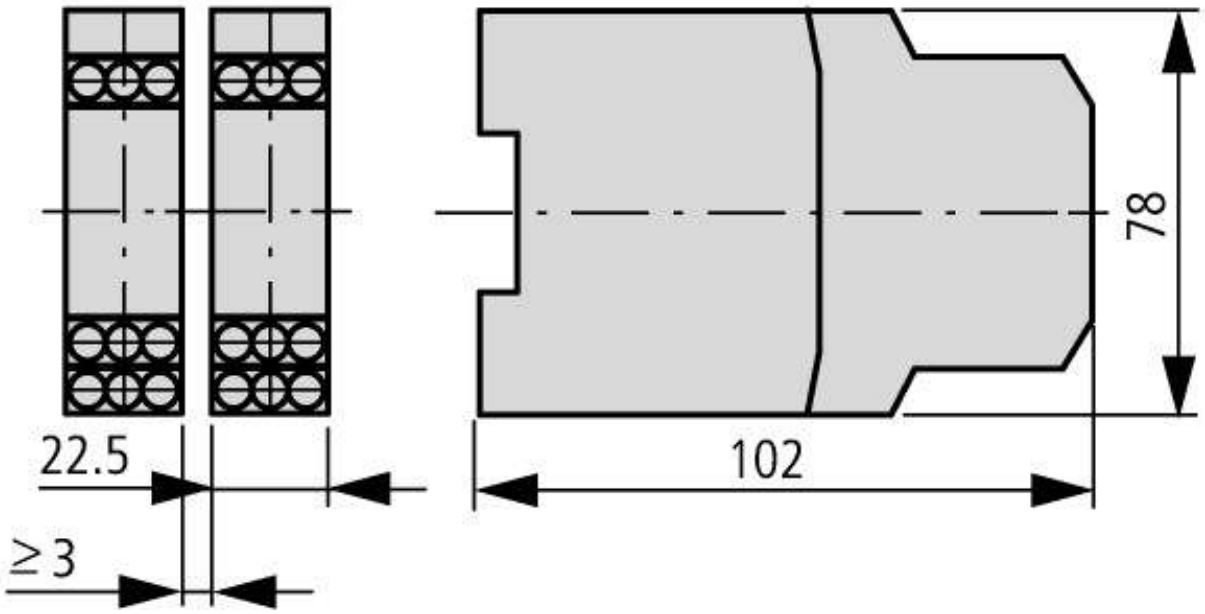

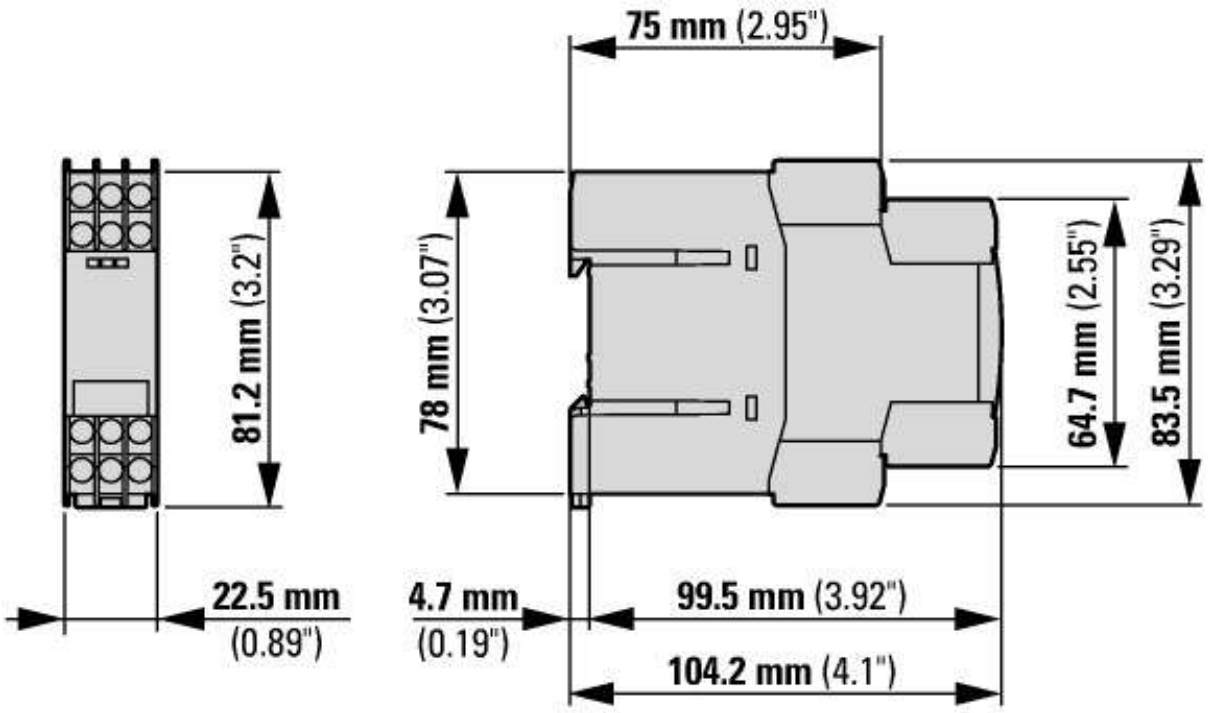

Applies to release 001 and higher

Assets (links)

Declaration of CE Conformity

00002815

Instruction Leaflets

IL03407100Z2018_05

Manuals

MN03407006Z_DE_EN (German)
MN03407006Z_DE_EN (English)

© 10/2019 by Eaton Industries GmbH