E11439

Jumper cable with valve plug

VVSAC031MSS0002H03STGH030MSS

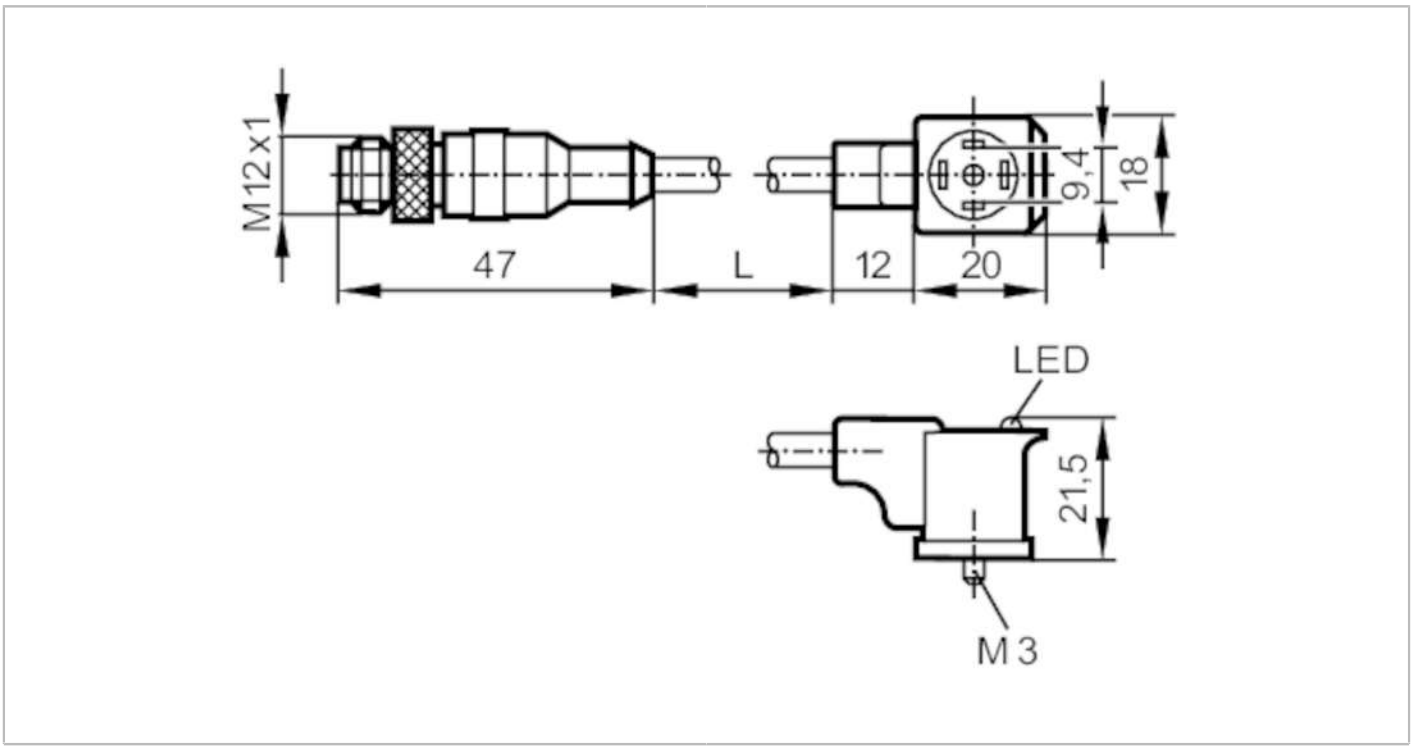

Application			
Special feature			Free from silicone; Halogen-free; Gold-plated contacts
Free from silicone			yes
Electrical data			
Operating voltage	[V]		< 24 AC/DC
Overvoltage protection			yes; (VDR)
Max. current load total	[A]		3
Operating conditions			
Ambient temperature	[°C]		-25...80
Protection			IP 67
Mechanical data			
Weight	[g]		120.3
Materials			PUR
Moulded-body material			PUR
Material nut			brass, nickel-plated
Displays / operating elements			
Display		switching status	1 x LED, yellow
Accessories			
Items supplied			screw
			panel for labelling
Remarks			
Pack quantity			1 pcs.

E11439

Jumper cable with valve plug

VVSAC031MSS0002H03STGH030MSS

Electrical connection - plug

Connector: 1 x M12, straight; coding: A; Moulded body: PUR; Locking: brass, nickel-plated; Contacts: gold-plated; Tightening torque: 0.7...0.9 Nm

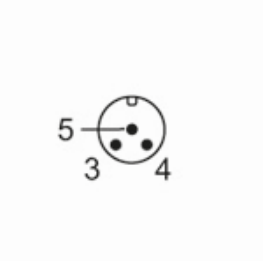

Electrical connection

Cable: 2 m, PUR, Halogen-free, black, Ø 5 mm; 3 x 0.5 mm² (42 x Ø 0.1 mm)

Connection

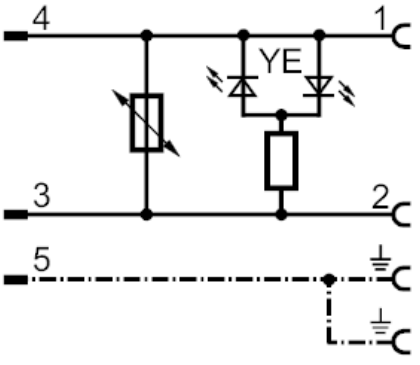

Electrical connection - socket

Connector: 1 x valve type C industrial standard, angled; Moulded body: PUR; Locking: brass, nickel-plated; Contacts: nickel-plated brass; Tightening torque: 0.7...0.9 Nm

