

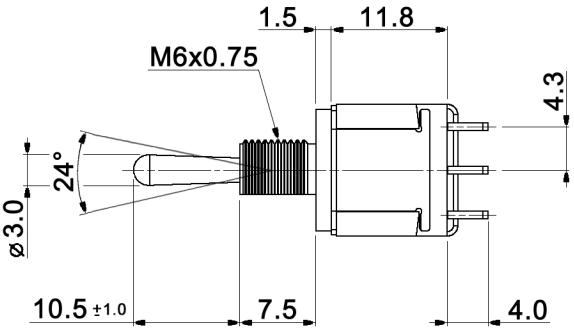

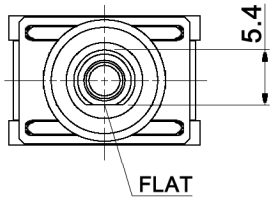

PANEL MOUNTING

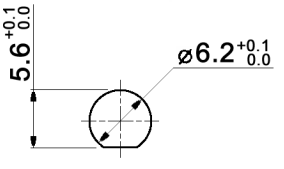

CONTACT ARRANGEMENT

code for x	function	toggle towards keyway	toggle opposite to keyway
D	On-On	1-2, 4-5, 7-8	2-3, 5-6, 8-9
F	Mom-On		

code for x	function	toggle towards keyway	toggle in center	toggle opposite to keyway
E	On-Off-On	1-2, 4-5, 7-8	open	2-3, 5-6, 8-9
G	Mom-Off-Mom			
H	Mom-Off-On			
EA	On-On-On	1-2, 4-5, 7-8	2-3, 4-5, 8-9	2-3, 5-6, 8-9

Specifications:

Contact rating:	3A, 250V AC / 6A, 125V AC 4A, 30V DC / 5A, 12V DC 6A, 6V DC
Contact resistance:	20mOhm max.
Insulation resistance:	1 000MOhm min. at 500V DC
Dielectric strength:	1 500V, 50Hz for the duration of 1 minute
Operating temperature:	-45°C to +140°C
Mechanical life:	min. 200 000 cycles
Soldering conditions:	hand-soldering: max.: 420°C, 3sec., 60W auto-soldering: max.: 270°C, 5sec.
Mounting instruction:	max. torque: 49Ncm
Material:	Terminal: brass, C1020 silver plated Case: DAP Housing: stainless steel, CNS9265 Bushing: copper alloy, C3604BD nickel plated Actuator: copper alloy, C3604BD chrome plated
Included accessories:	1 pc. nut M6x0.75, nickel plated, 9mm wrench size 1 pc. tooth washer 1 pc. O-ring
Sealing:	IP 67

RoHS-conform · 2002 / 95 / EC

Tolerances: 0.00: ±0.25mm 0.0: ±0.40mm			Date	Name	MTE 306 x
			11/09	dr	
Dimension	01/11	dr	knitter-switch	30 19 58	Page
Sealing	12/10	dr			1/1
Modifications	Date	Name			