IS5101

Inductive sensor

IS-3002-BPKG/0,145M/-H

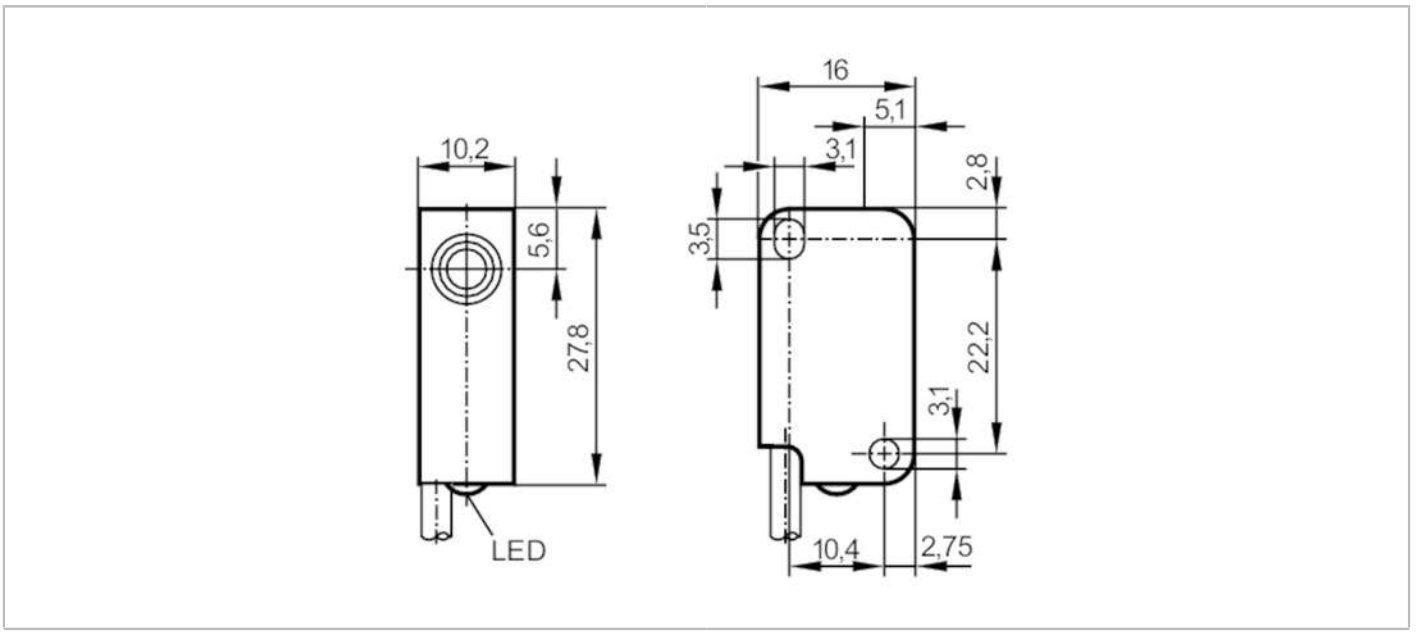

Product characteristics		
Electrical design		PNP
Output function		normally open
Sensing range	[mm]	2
Housing		rectangular
Dimensions	[mm]	28 x 10 x 16
Electrical data		
Operating voltage	[V]	10...36 DC
Current consumption	[mA]	< 15
Protection class		III
Reverse polarity protection		yes
Outputs		
Electrical design		PNP
Output function		normally open
Max. voltage drop switching output DC	[V]	2.5
Permanent current rating of switching output DC	[mA]	250
Switching frequency DC	[Hz]	800
Short-circuit protection		yes
Overload protection		yes
Detection zone		
Sensing range	[mm]	2
Real sensing range Sr	[mm]	2 ± 10 %
Operating distance	[mm]	0...1.6

IS5101

Inductive sensor

IS-3002-BPKG/0,145M/-H

Accuracy / deviations			
Correction factor		steel: 1 / stainless steel: 0.7 / brass: 0.5 / aluminium: 0.4 / copper: 0.3	
Hysteresis	[% of Sr]	3...15	
Switch point drift	[% of Sr]	-10...10	
Operating conditions			
Ambient temperature	[°C]	-25...80	
Protection		IP 67	
Tests / approvals			
EMC		EN 61000-4-2 ESD	8 kV AD
		EN 61000-4-3 HF radiated	3 V/m
		EN 61000-4-4 Burst	2 kV
		EN 61000-4-6 HF conducted	3 V
		EN 55011	class B
MTTF	[years]	3044	
Mechanical data			
Weight	[g]	14.2	
Housing		rectangular	
Mounting		flush mountable	
Dimensions	[mm]	28 x 10 x 16	
Materials		PBT	
Tightening torque	[Nm]	< 0.5; (with washer)	
Displays / operating elements			
Display		switching status	1 x LED, yellow
Remarks			
Pack quantity		1 pcs.	
Electrical connection			

Cable: 0.145 m, PVC; 3 x 0.34 mm²

Connection

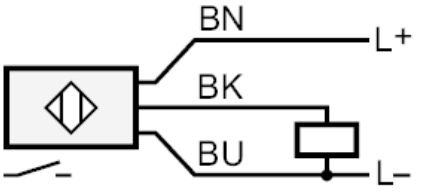

	Core colours :
BN =	brown
BU =	blue
BK =	black