Rakego

Art no	A = mm	B=mm	C = mm	P1 (kp)	P2 (kp)
382020	20-30	150	14	60	30
383020	20-35	247	44	60	30
384520	20-46	392	86	60	30
386020	20-40	544	136	60	30
382025	25-30	161	15	70	35
383025	25-39	252	45	95	55
384525	25-50	402	87	120	60
386025	25-40	549	137	140	80

Anodized natural (20MY) aluminium (AA6063). Rakego is a telescopic aluminium-support where a large amount of requirment for quality is met. The support has a large number of possibilities. Specially suited for drop leavs, work enches, tables and especially for small spaces. It is a compact alternative comparing to other constructions, for example tables, shelfs etc. With great success the Rakego-support has been introduced to, among other things family boats. The support can be obtained in different dimensions depending on pressure-conditions. We do not know in what way you will use the Rakego-support, we just know you will find it excellent and easy to handle. Patent reg.

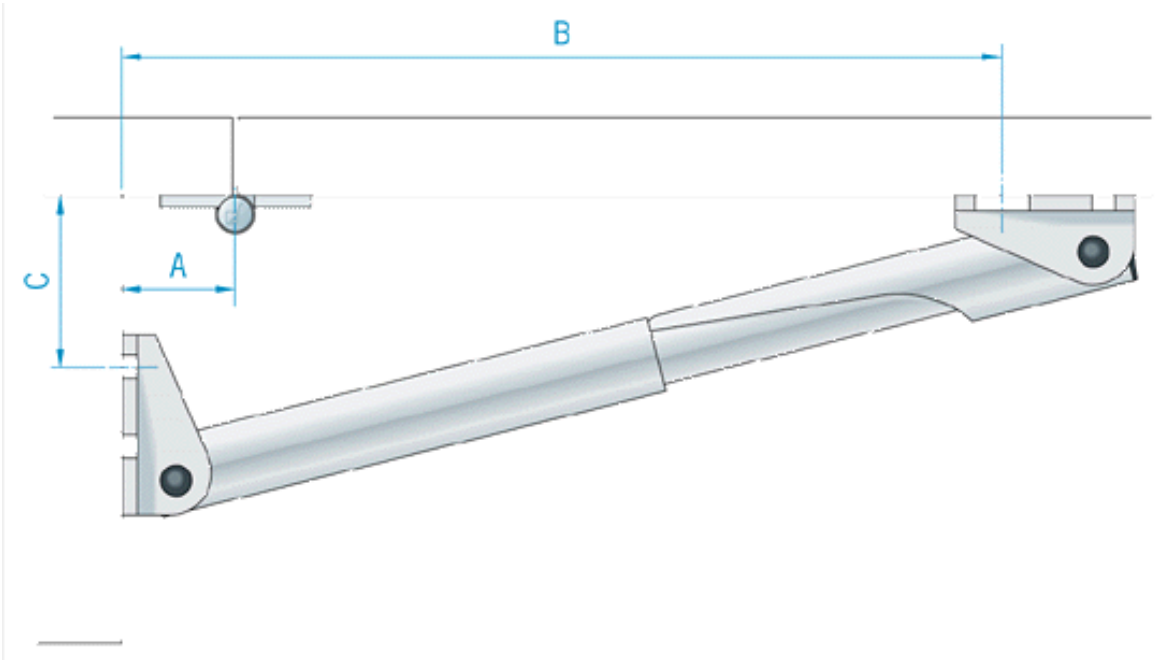

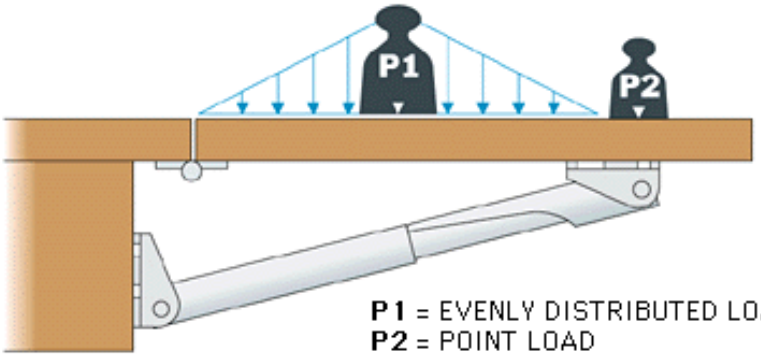

P1 = EVENLY DISTRIBUTED LOAD
P2 = POINT LOAD



Frigörning av spärr.
Lyft lite i fällskivans ytterkant samtidigt som du med ett finger trycker på stödets yttre rördel och fäller skivan.

Release the catch.
Slightly lift the outer edge of the board and simultaneously press the support´s outer part of the tube with a finger and downfold the table.

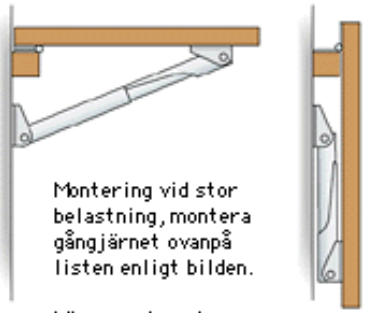

Montering vid stor belastning, montera gångjärnet ovanpå listen enligt bilden.

When you have heavy loading, you mount the hinges on the top of the hatch as shown in the picture.