99215

Dimensions

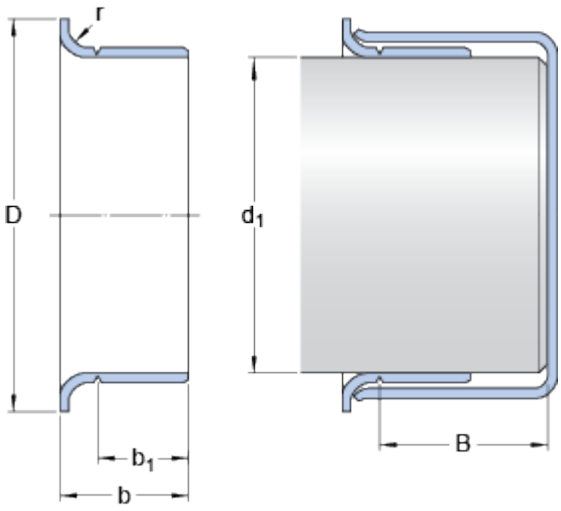

Nominal dimensions

d_1		55	mm
D		62.001	mm
Tolerance outside diameter D	±	1.6	mm
b		22.987	mm
Tolerance width b	±	0.8	mm
b_1		19.99	mm
Tolerance width b1	±	0.8	mm
B	max.	31.75	mm
r	max.	3.18	mm

Shaft diameter range

d_1	min.	54.915	mm
d_1	max.	55.067	mm