BFD6500A400

THREE-POLE CONTACTOR, 35A/1000V DC1, AC COIL, 400VAC 50/60HZ



Product designation			Power contactor
Product type designation			BFD65
Contact characteristics			
Number of poles		Nr.	3
Rated insulation voltage Ui IEC/EN		V	1000
Rated impulse withstand voltage Uimp		kV	8
Operational frequency			
	min	Hz	25
	max	Hz	400
IEC Conventional free air thermal current Ith		A	115
IEC max current Ie in DC1 with L/R ≤ 1ms with 3 poles in series			
	400V	A	100
	600V	A	75
	800V	A	45
	1000V	A	35
Short-time allowable current for 10s (IEC/EN60947-1)		A	640
Protection fuse			
	gG (IEC)	A	125
	aM (IEC)	A	80
Resistance per pole (average value)		mΩ	0.6
Power dissipation per pole (average value)			
	Ith	W	7.9
Tightening torque for terminals			
	min	Nm	4
	max	Nm	5
	min	lbin	2.95
	max	lbin	3.69
Tightening torque for coil terminal			
	min	Nm	0.8
	max	Nm	1
	min	lbin	0.8
	max	lbin	0.74
Max number of wires simultaneously connectable		Nr.	2
Conductor section			
AWG/Kcmil			
	max		2
Flexible w/o lug conductor section			
	min	mm²	1.5
	max	mm²	35
Flexible c/w lug conductor section			
	min	mm²	1.5
	max	mm²	35
Power terminal protection according to IEC/EN 60529			IP20 front
Mechanical features			
Operating position			

The characteristics described in this document are subject to updates or modifications at any time. The descriptions, technical and functional information, illustrations and instructions in this brochure are purely illustrative, and are consequently not contractually binding

		normal allowable		Vertical plan ±30°
Fixing				Screw / DIN rail 35mm
Weight			g	1240
Conductor section				
	AWG/kcmil conductor section			
		max		2
Operations				
Mechanical life			cycles	15000000
Safety related data				
Performance level B10d according to EN/ISO 13489-1				
		mechanical load	cycles	15000000
EMC compatibility				yes
AC coil operating				
Rated AC voltage at 50/60Hz			V	400
AC operating voltage				
	of 50/60Hz coil powered at 50Hz			
		pick-up		
			min	%Us 80
			max	%Us 110
		drop-out		
			min	%Us 20
			max	%Us 55
	of 50/60Hz coil powered at 60Hz			
		pick-up		
			min	%Us 85
			max	%Us 110
		drop-out		
			min	%Us 20
			max	%Us 55
AC average coil consumption at 20°C				
	of 50/60Hz coil powered at 50Hz			
			in-rush	VA 210
			holding	VA 15
	of 50/60Hz coil powered at 60Hz			
			in-rush	VA 195
			holding	VA 13
	of 60Hz coil powered at 60Hz			
			in-rush	VA 210
			holding	VA 15
Dissipation at holding ≤20°C 50Hz			W	5
Max cycles frequency				
Mechanical operation			cycles/h	3600
Operating times				
Average time for Us control				
	in AC			
		Closing NO		
			min	ms 12
			max	ms 28
		Opening NO		
			min	ms 8
			max	ms 22
	in DC			

The characteristics described in this document are subject to updates or modifications at any time. The descriptions, technical and functional information, illustrations and instructions in this brochure are purely illustrative, and are consequently not contractually binding

	Closing NO			
		min	ms	40
		max	ms	85
	Opening NO			
		min	ms	20
		max	ms	55

UL technical data

General USE				
	Contactor			
		AC current	A	115
	4 poles in series DC1			
		600V	A	100

Ambient conditions

Temperature				
	Operating temperature			
		min	°C	-50
		max	°C	70
	Storage temperature			
		min	°C	-60
		max	°C	80
Max altitude			m	3000

Resistance & Protection

Pollution degree				3

Dimensions

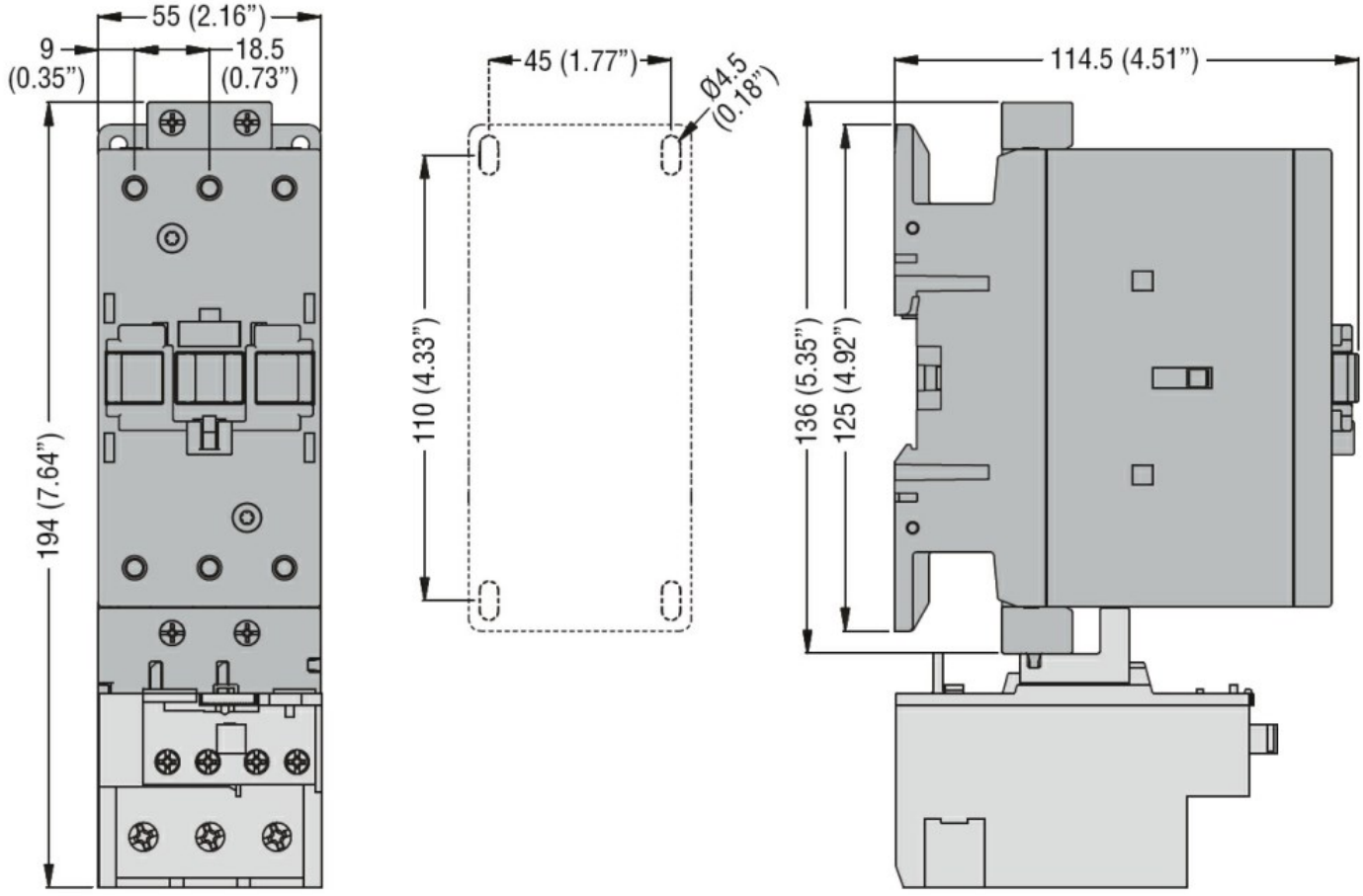

Wiring diagrams

The characteristics described in this document are subject to updates or modifications at any time. The descriptions, technical and functional information, illustrations and instructions in this brochure are purely illustrative, and are consequently not contractually binding

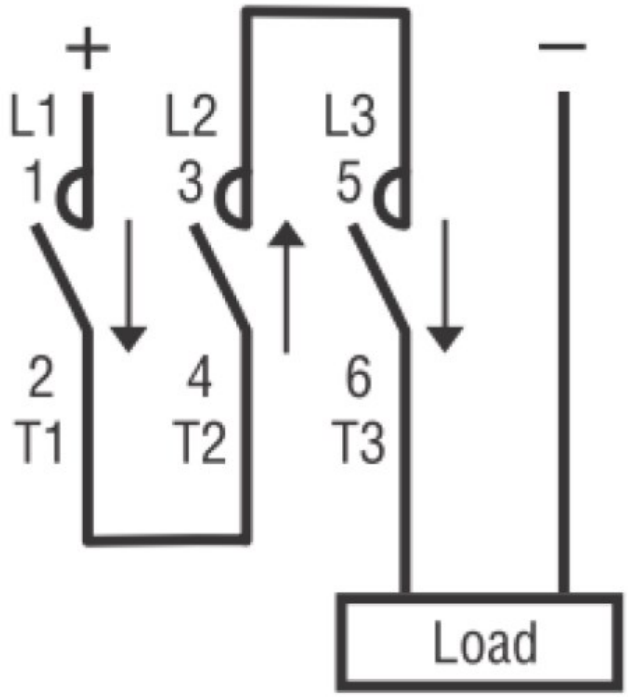

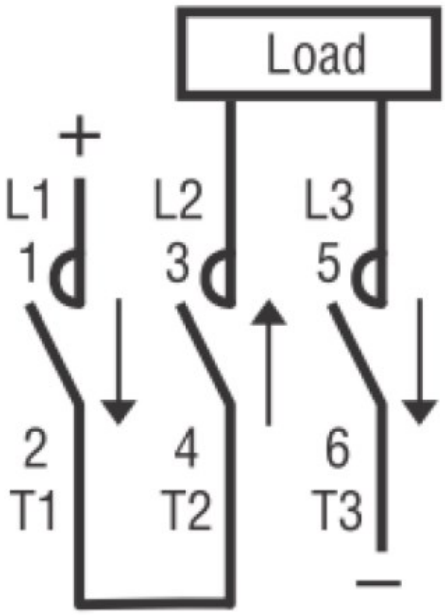

Certifications and compliance

Compliance

CSA C22.2 n° 60947-1
CSA C22.2 n° 60947-4-1
IEC/EN/BS 60947-1
IEC/EN/BS 60947-4-1
UL 60947-1
UL 60947-4-1

ETIM classification

ETIM 8.0	EC002552 - Power contactor, DC switching

The characteristics described in this document are subject to updates or modifications at any time. The descriptions, technical and functional information, illustrations and instructions in this brochure are purely illustrative, and are consequently not contractually binding