IF5818

Inductive sensor

IFB3004-APKG/V4A/US-104-DPO RT

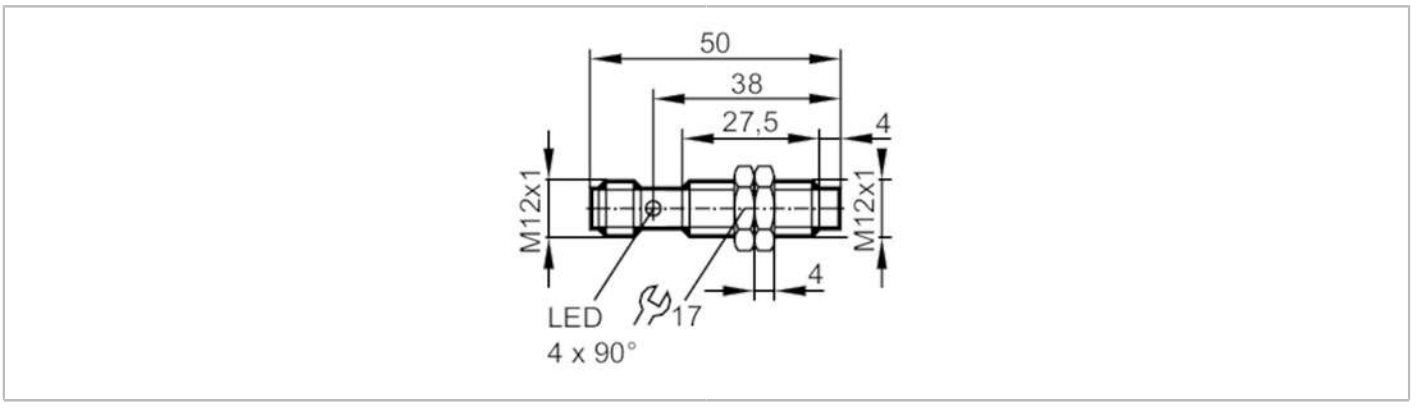

Product characteristics		
Electrical design		PNP
Output function		normally closed
Sensing range	[mm]	4
Housing		threaded type
Dimensions	[mm]	M12 x 1 / L = 50
Electrical data		
Operating voltage	[V]	10...36 DC
Current consumption	[mA]	< 15
Protection class		III
Reverse polarity protection		yes
Outputs		
Electrical design		PNP
Output function		normally closed
Max. voltage drop switching output DC	[V]	2.5
Permanent current rating of switching output DC	[mA]	250
Switching frequency DC	[Hz]	1400
Short-circuit protection		yes
Type of short-circuit protection		pulsed
Overload protection		yes
Detection zone		
Sensing range	[mm]	4
Real sensing range Sr	[mm]	4 ± 10 %
Operating distance	[mm]	0...3.25
Accuracy / deviations		
Correction factor		steel: 1 / stainless steel: 0.7 / brass: 0.5 / aluminium: 0.4 / copper: 0.3
Hysteresis	[% of Sr]	1...15
Switch point drift	[% of Sr]	-10...10

IF5818

Inductive sensor

IFB3004-APKG/V4A/US-104-DPO RT

Operating conditions			
Ambient temperature	[°C]	-25...80	
Protection		IP 65	
Tests / approvals			
EMC		EN 60947-5-2	
MTTF	[years]	2466	
Mechanical data			
Weight	[g]	24.9	
Housing		threaded type	
Mounting		non-flush mountable	
Dimensions	[mm]	M12 x 1 / L = 50	
Thread designation		M12 x 1	
Materials		stainless steel (1.4404 / 316L); sensing face: PC	
Displays / operating elements			
Display		switching status	4 x 90° LED, red
Accessories			
Items supplied		lock nuts: 2	
Remarks			
Pack quantity		1 pcs.	

Electrical connection - plug

Connector: 1 x M12; coding: A



Connection

