theben-timer 26 safety-plus

Item no.: 0260833

Time and light control
Analogue time switches

Description

- Analogue plug-in timer
- Daily program
- With shutter, reduces the risk of people coming into contact with live parts of the socket outlet contact with live parts of the socket and possibly receive an electric shock
- 1 channel
- Synchronised with mains, without power reserve
- Use with earthed sockets
- Switching preselection and switching status display
- 96 switching segments
- Shortest switching time: 15 minutes



Technical data

	theben-timer 26 safety-plus
Operating voltage	230 V AC
Frequency	50 Hz
Number of channels	1
Installation type	Plug-in
Type of connection	Plug-in
Program	Daily program
Switching capacity at 250 V AC, cos φ = 1	16 A
Switching capacity at 250 V AC, cos φ = 0,6	4 A
Shortest switching times	15 min

	theben-timer 26 safety-plus
Programmable every	15 min
Time accuracy at 25 °C	Synchronised with mains
Type of contact	NO contact
Number of switching segments	96
Stand-by consumption	~0.8 W
Housing and insulation material	High-temperature resistant, self-extinguishing thermoplastic
Type of protection	IP 20
Protection class	II according to EN 60 730-1
Ambient temperature	-40°C ... 55°C

theben-timer 26 safety-plus

Item no.: 0260833

Connection example

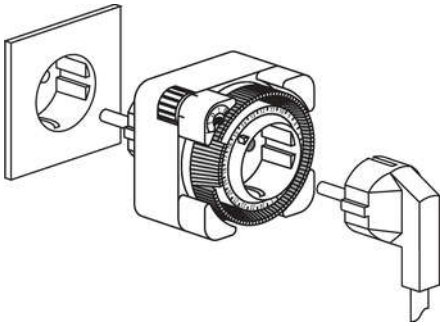

Scale drawings

