Maintenance unit, 3-part, Series AS5-ACT

- G 3/4
- filter porosity 5 µm
- lockable
- for padlocks
- with pressure gauge
- suitable for ATEX



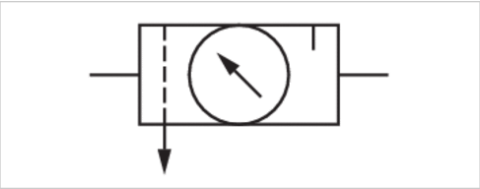

Version	3-part, Can be assembled into blocks
Parts	Pressure regulator, Filter, Lubricator
Mounting orientation	vertical
Certificates	suitable for ATEX
Working pressure min./max.	See table
Ambient temperature min./max.	-10 ... 50 °C
Medium temperature min./max.	-10 ... 50 °C
Medium	Compressed air Neutral gases
Nominal flow Qn	12300 l/min
Regulator type	Diaphragm-type pressure regulator
Regulator function	with relieving air exhaust
Adjustment range min./max.	0,5 ... 8 bar
Pressure supply	single
Filter reservoir volume	87 cm³
Filter element	exchangeable
Condensate drain	See table
Lubricator reservoir volume	181 cm³
Type of filling	Semi-automatic oil filling during operation Manual oil filling
Weight	See table

Technical data

Part No.	Port	Flow	Working pressure min./max.
		Qn	
R412009320	G 3/4	12300 l/min	0 ... 16 bar
R412009318	G 3/4	12300 l/min	1,5 ... 16 bar
R412009319	G 3/4	12300 l/min	1,5 ... 16 bar
R412009329	G 1	12300 l/min	0 ... 16 bar
R412009327	G 1	12300 l/min	1,5 ... 16 bar
R412009328	G 1	12300 l/min	1,5 ... 16 bar

Part No.	Condensate drain	Weight
R412009320	fully automatic, closed without pressure	2,68 kg
R412009318	semi-automatic, open without pressure	2,63 kg
R412009319	fully automatic, open without pressure	2,68 kg
R412009329	fully automatic, closed without pressure	2,68 kg
R412009327	semi-automatic, open without pressure	2,63 kg
R412009328	fully automatic, open without pressure	2,68 kg

Technical information

The pressure dew point must be at least 15 °C under ambient and medium temperature and may not exceed 3 °C .
Note: Polycarbonate reservoirs are susceptible to solvents, supplementary information can be found at "Customer information".
Suitable for use in Ex zones 1, 2, 21, 22
A change in the flow direction (from air supply on the left to air supply on the right) occurs by rotating installation by 180° about the vertical axis. Please see the operating instructions for further details.
Also suitable for separation of fluid oil or water due to the design.

Technical information

Material	
Housing	Polyamide
Front plate	Acrylonitrile butadiene styrene
Seals	Acrylonitrile butadiene rubber
Threaded bushing	Die cast zinc
Reservoir	Polycarbonate
Protective guard	Polyamide
Filter insert	Polyethylene

Dimensions

Dimensions

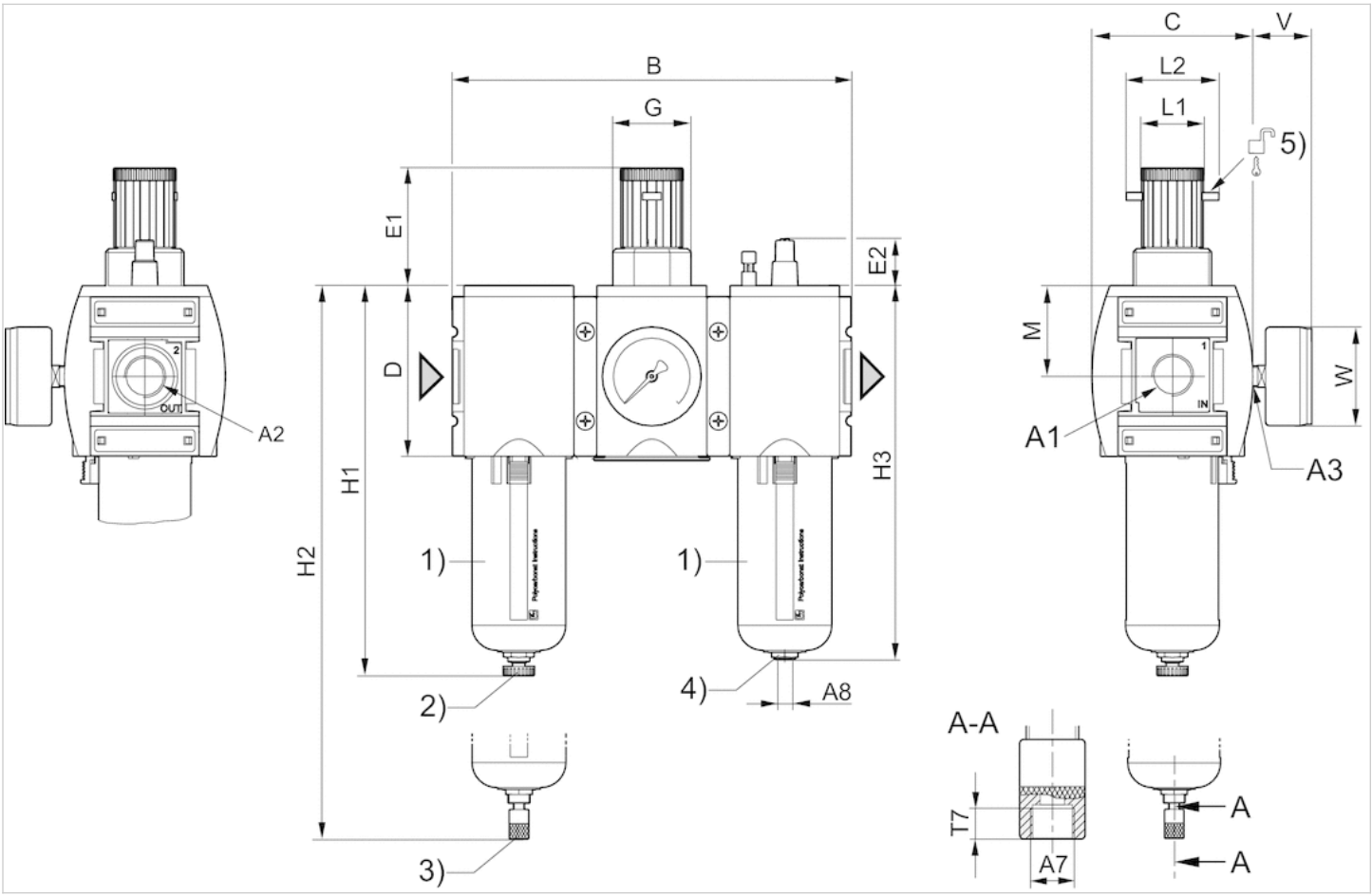

A1 = inputA2 = outputA3 = pressure gauge connection
A7 = condensate drain
1) Plastic reservoir and protective guard with window
2) Semi-automatic condensate drain
3) Fully automatic condensate drain
4) Port for semi-automatic oil filling
5) Mounting option for padlocks; max. shackle Ø 8

Dimensions in mm

A1	A2	A3	A7	A8	B	C	D	E1	E2	G	H1	H2	H3	L1	L2	M	T7	V	W
G 3/4	G 3/4	G 1/4	G 1/8	G 1/8	255	103	109	75	30.5	M50x1,5	250	266	239	41	60	58	8.5	38	63
G 3/4	G 3/4	G 1/4	G 1/8	G 1/8	255	103	109	75	30.5	M50x1,5	250	266	239	41	60	58	8.5	38	63
G 3/4	G 3/4	G 1/4	G 1/8	G 1/8	255	103	109	75	30.5	M50x1,5	250	266	239	41	60	58	8.5	38	63
G 1	G 1	G 1/4	G 1/8	G 1/8	255	103	109	75	30.5	M50x1,5	250	266	239	41	60	58	8.5	38	63

Diagrams

Lubricator activation margin

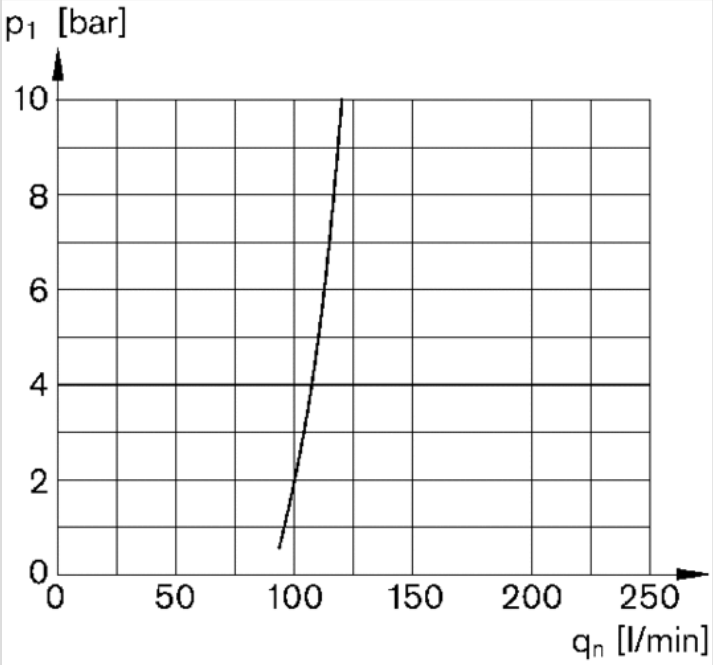

p1 = working pressureqn = nominal flow

Flow rate characteristic (setting range p2: 0.5 - 8 bar)

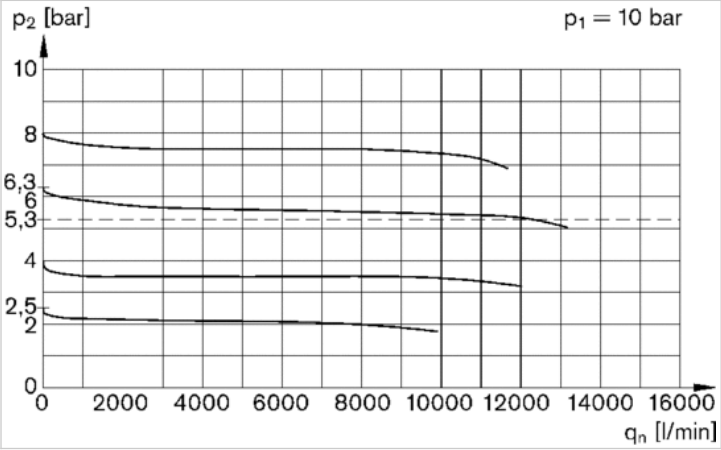

p1 = Working pressurep2 = Secondary pressureqn = Nominal flow