PRODUCT DETAILS

ARTICLE: 16434FE

WHEEL E 160X50/60 RB BOLT HOLE F.12 SWIVEL FORK M22



Wheel series E

Wheels with elastic solid rubber tyre bonded to die-cast aluminum centre.
Available with ball bearings or roller bearings.
Wheel fitted with standard roller bearing.

Castor series M22

M22 series, Medium-light pressed steel fork assemblies; swivel version has double ball raceways. Zincplated.

Sigle bolt hole fixing for bolt diam. 12-14 mm.

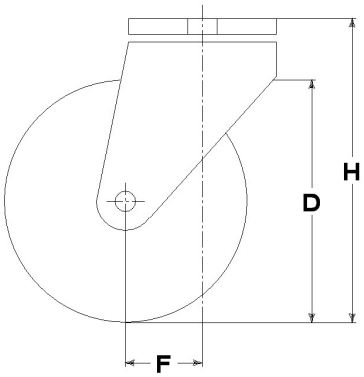

Technical data

Wheel diameter	D	160 mm
Tyre width	E	50,0 mm
Bore diameter	d	20 mm
Weight article		2,670 kg
Hub width	L	60 mm
Overall height	H	196 mm
Fixing bolt diameter	g	M12-14
Offset	F	56 mm
Fork width	U	60 mm
Load Capacity		300 kg

Related Articles

Spare part wheel: 2055
Version with footguard: 16434PPFE
Version with trailing brake: 16434FRFE
Version with trailing brake and footguard: 16434FRPPFE

GENERAL INFORMATION / RECOMMENDATIONS AND WARNINGS
The cited text and the complete catalogue in their most up-dated versions are available in the OEM's website page www.lagspa.it/downloads. The dimensions, descriptions, specifications and illustrations herein are indicative and subject to variations without notice. The fact that products are illustrated herein does not necessarily imply they are available from stock nor does it place us under any obligation to supply them.
Tests carried out refer to the original products with original accessories: the replacement of one of the components with others of different manufacture might prevent the same results from being achieved and will automatically invalidate any guarantee. Please contact our technical service concerning any special application.