4208 ATN9

Dimensions

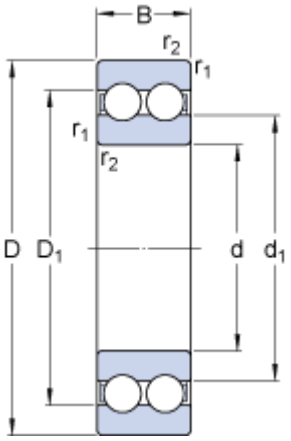

d		40	mm
D		80	mm
B		23	mm
d_1	≈	54	mm
D_1	≈	66	mm
$r_{1,2}$	min.	1.1	mm

Abutment dimensions

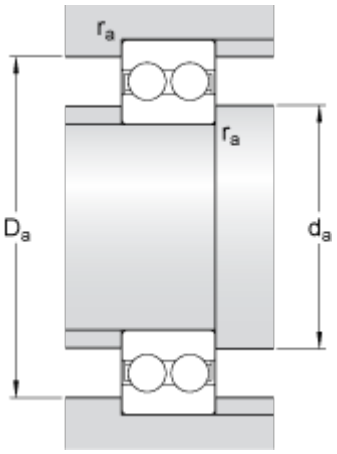

d_a	min.	47	mm
D_a	max.	73	mm
r_a	max.	1	mm

Calculation data

Basic dynamic load rating	C	37.1	kN
Basic static load rating	C_0	32.5	kN
Fatigue load limit	P_u	1.4	kN
Reference speed		13000	r/min
Limiting speed		7000	r/min
Calculation factor minimum radial load	k_r	0.05	
Calculation factor	f_0	15	

Mass

Mass bearing		0.5	kg