Midi Horns and Sirens / Horn for bracket mounting 574/575

Signal horn WM Contin. tone 24VAC/DC GY



Part No.: 575.000.75

MECHANICAL DATA	
Height	169 mm
Diameter	134 mm
Materials	PC/ABS
Housing colour	Grey
Protection category	IP65
Connection	Screw terminals
cross-sectional area maximum	1,50mm² / 16AWG
Cable entry	Membrane grommet
Cable entry minimum	d = 1 mm
Cable entry maximum	d = 13 mm
Type of fixing	Wall mounting
Working temperature minimum	-30°C
Working temperature maximum	+50°C
Weight with packaging	440 g
Product weight	370 g

ELECTRICAL DATA	
Operating voltage	24V
Operating voltage type	AC/DC
Operating voltage frequency	50Hz
Operating voltage tolerance	+/- 10%
Rated operational voltage	24 VDC
Rated operational current	55 mA
Rated inrush current	200 mA
Protection class	Protection class 2
Pollution degree	3

ACUSTICAL DATA	
Volume (max) at 1m distance	108,0 dB (A)
Acoustic signal image	Continuous tone
Audio frequency	110 Hz
Acoustic service life	5,000 h minimum

APPROVAL DATA	
Conforms with CE	Yes
WEEE	Yes
Conforms with ATEX-directive	No
Conforms with CCC	No
Conforms with UL	cULus

! For additional installation and mounting information, refer to the appropriate user guide at www.werma.com. This printed copy is for information only and is subject to alteration.

Midi Horns and Sirens / Horn for bracket mounting 574/575

Signal horn WM Contin. tone 24VAC/DC GY

UL Type Rating	Type 12
Conforms with FCC	No
Conforms with IC	No
EAC certificate available	Yes
Conforms with UKCA (Importer)	Yes (WERMA (UK) Ltd.)
Conforms with CMIM	No
Conforms with AS-I	No
ICAO Certification	No
Conforms with DNV	No
Conforms with RoHS CN	No
Conforms with VdS	No

DRAWING

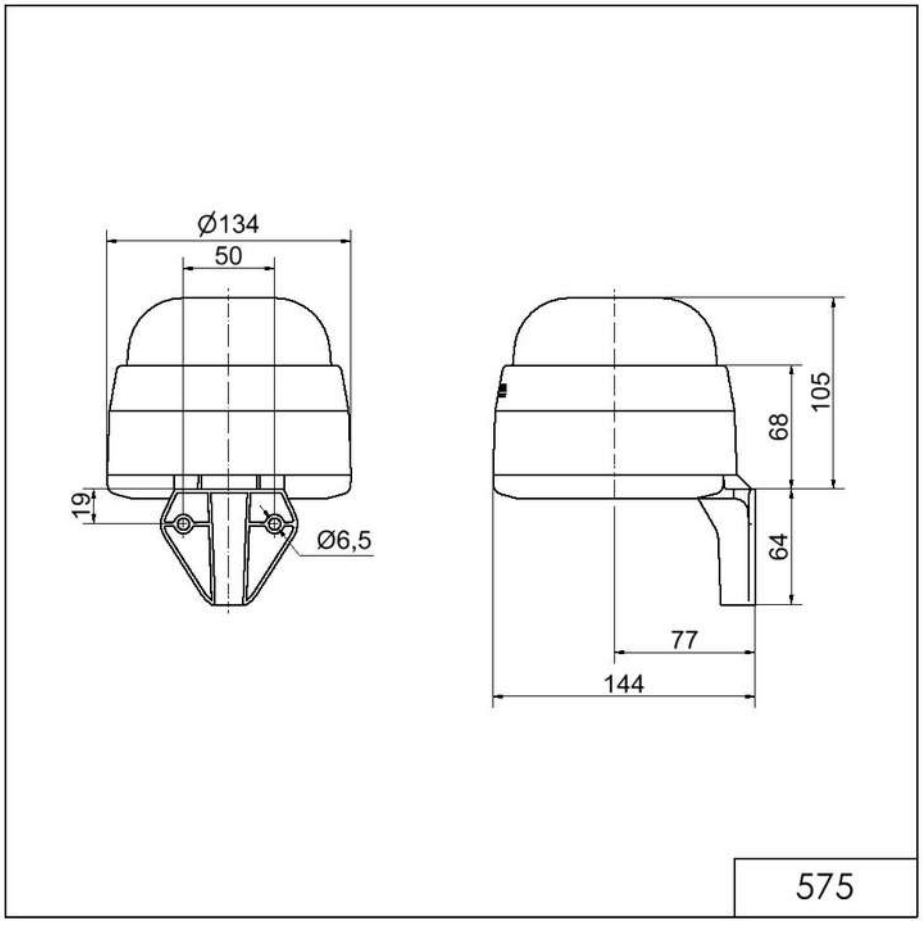

! For additional installation and mounting information, refer to the appropriate user guide at www.werma.com. This printed copy is for information only and is subject to alteration.