E12505

Connecting cable with socket

ADOAH120ZDS0010H12

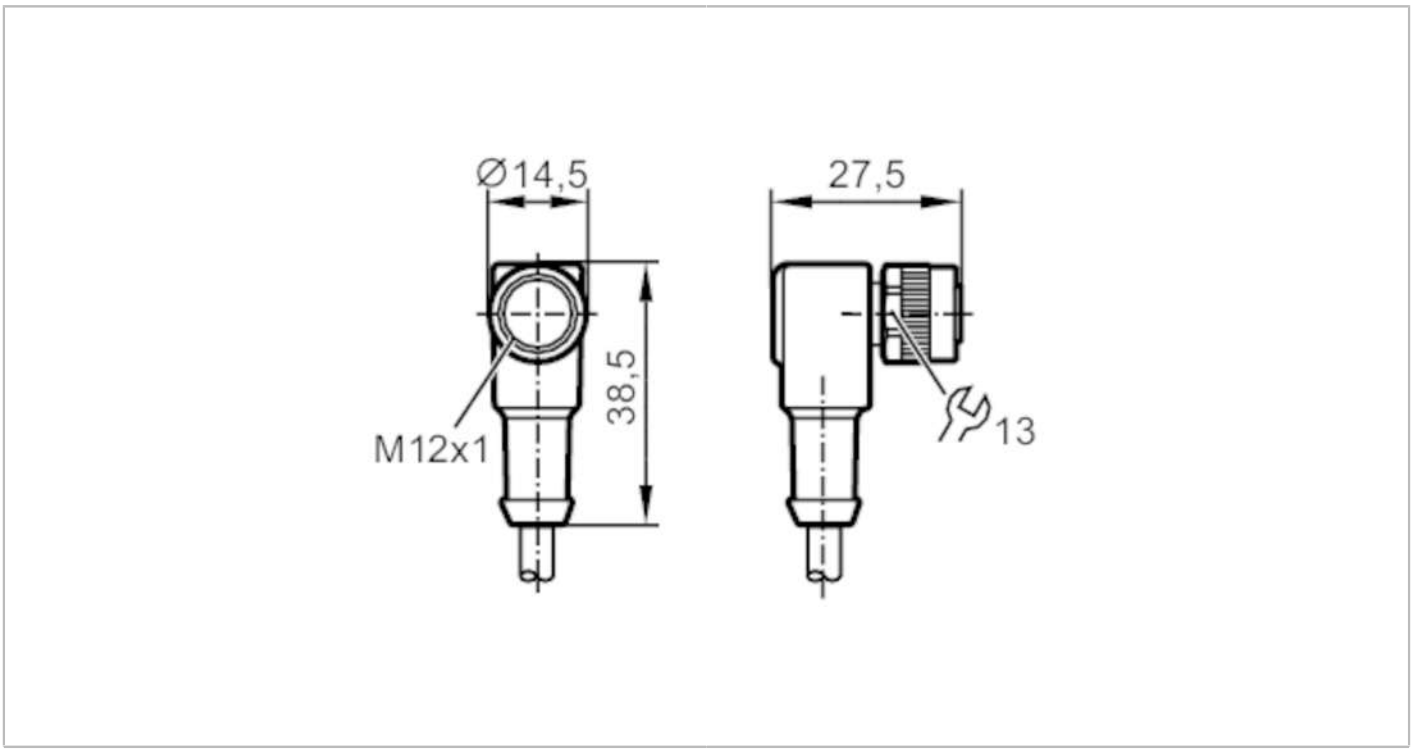

Application		
Special feature		Free from silicone; Halogen-free; Gold-plated contacts; Drag chain suitability
Free from silicone		yes
Electrical data		
Operating voltage	[V]	< 30 AC/DC
Protection class		II
Max. current load total	[A]	1.5
Operating conditions		
Ambient temperature	[°C]	-25...90
Protection		IP 67
Mechanical data		
Weight	[g]	623.5
Materials		PUR
Moulded-body material		PUR
Material nut		diecast zinc, nickel-plated
Drag chain suitability		yes
Drag chain suitability	bending radius for flexible use	min. 10 x cable diameter
	travel speed	max. 3.3 m/s for a horizontal travel length of 5 m and max. acceleration of 5 m/s²
	bending cycles	> 2 Mio.
	torsional strain	360 °/m
Remarks		
Pack quantity		1 pcs.

E12505

Connecting cable with socket

ADOAH120ZDS0010H12

Electrical connection

Cable: 10 m, PUR, Halogen-free, black, Ø 6.6 mm; 12 x 0.25 mm²

Electrical connection - socket

Connector: 1 x M12, angled; Moulded body: PUR; Locking: diecast zinc, nickel-plated; Contacts: gold-plated; Tightening torque: 0.7...0.9 Nm



Connection

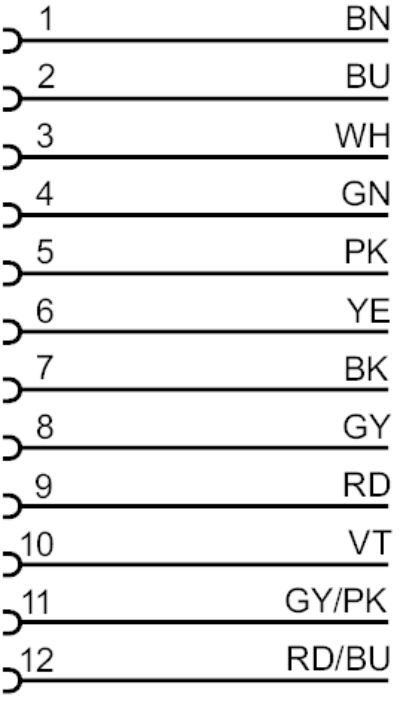

	Core colours :
BK =	black
BN =	brown
BU =	blue
GN =	green
GY =	grey
GY/PK =	grey/pink
PK =	pink
RD =	red
VT =	lilac
WH =	white
YE =	yellow
RD/BU =	red/blue