EVT086

Connecting cable with plug

ASTGH030VAS0002E03

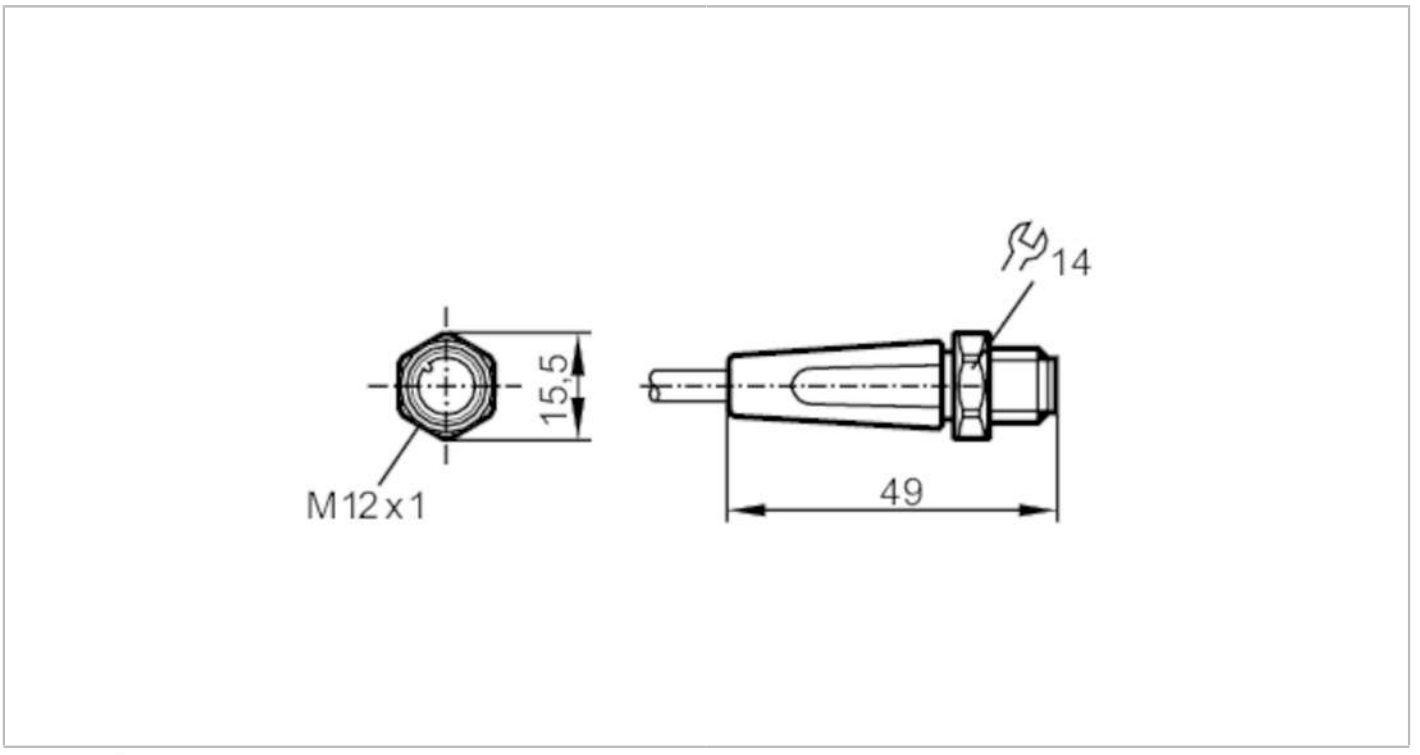

Application		
Special feature		Free from silicone; Gold-plated contacts; Drag chain suitability
Application		hygienic and wet areas in the food industry
Free from silicone		yes
Electrical data		
Operating voltage	[V]	< 250 AC / < 300 DC
Protection class		II
Max. current load total	[A]	4
Operating conditions		
Ambient temperature	[°C]	-25...100
Note on ambient temperature		cULus: ...50 °C
Ambient temperature (moving)	[°C]	5...100
Note on ambient temperature (moving)		cULus: ...50 °C
Storage temperature	[°C]	-25...55
Storage humidity	[%]	10...100
Other climatic conditions for storage according to stated class		1K22/ DIN 60721-3-1
Protection		IP 65; IP 67; IP 68; IP 69K
Mechanical data		
Weight	[g]	89.4
Dimensions	[mm]	15.5 x 15.5 x 49
Materials		housing: PVC orange

EVT086

Connecting cable with plug

ASTGH030VAS0002E03

Material nut	stainless steel (1.4404 / 316L)	
Drag chain suitability	yes	
Drag chain suitability	bending radius for flexible use	min. 10 x cable diameter
	travel speed	max. 3.3 m/s for a horizontal travel length of 5 m and max. acceleration of 5 m/s²
	bending cycles	> 1 Mio.
	torsional strain	± 180 °/m

Remarks

Pack quantity	1 pcs.

Electrical connection

Cable: 2 m, PVC, orange, Ø 4.9 mm; 3 x 0.34 mm² (42 x Ø 0.1 mm)

Electrical connection - plug

Connector: 1 x M12, straight; coding: A; Locking: stainless steel (1.4404 / 316L); Contacts: gold-plated; Tightening torque: 0.6...1.5 Nm

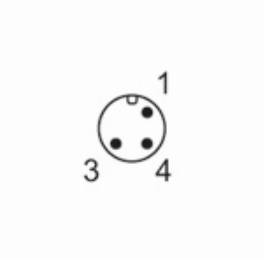

Connection

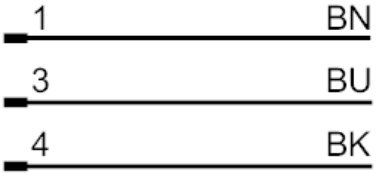

	Core colours :
BK =	black
BN =	brown
BU =	blue