20828-129 FRONT HANDLES 6 U

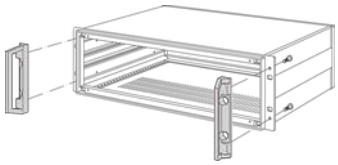

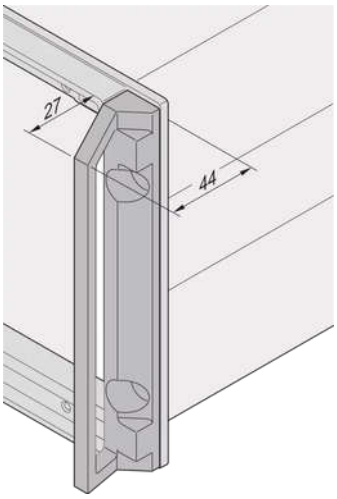

KEY FEATURES

Load-carrying capacity 35 kg per pair

PRODUCT ATTRIBUTES

Product Type: Handle
Type: Static
Works With: Chassis
Material: Aluminum
Color: Grey
Static Load: 35 kg
Package Quantity: 2

ADDITIONAL PRODUCT DETAILS

The front handles can be assembled to the Inpac Cases and enable an easier assembly of the case into a cabinet. The holes with enable a mouting of the handles have to be drilled by the user.

CERTIFICATIONS



North America
All locations
+1.763.422.2661
Chat with us:
schroff.nvent.com

Europe
Straubenhardt, Germany
+49.7082.794.0
Betschdorf, France
+33.3.88.90.64.90
Warsaw, Poland
+48.22.209.98.35
Assago, Italy
+39.02.932.7141
Chat with us:
schroff.nvent.com

Asia
Shanghai, China
+86.21.2412.6943
Qingdao, China
+86.532.8771.6101
Singapore
+65.6768.5800
Shin-Yokohama, Japan
+81.45.476.0271
Chat with us:
schroff.nvent.com

Middle East & India
Dubai, United Arab Emirates
+971.4.378.1700
Bangalore, India
+91.80.6715.2001
Istanbul, Turkey
+90.216.250.7374
Chat with us:
schroff.nvent.com



Our powerful portfolio of brands:
nVent.com **CADDY ERICO HOFFMAN RAYCHEM SCHROFF TRACER**

© 2024 nVent. All nVent marks and logos are owned or licensed by nVent Services GmbH or its affiliates. All other trademarks are the property of their respective owners.

nVent reserves the right to change specifications without notice.