E12259

Protective cover for T-slot cylinder sensors

ADAPT Protection T-SLOT Sensor

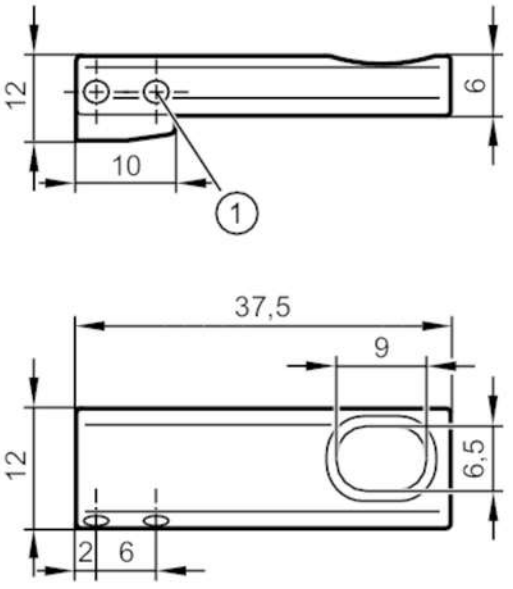

1 socket head screw M3 x 12

Application		
Design		for types MKT (T-slot cylinder sensors)
Mechanical data		
Weight	[g]	12.2
Type of mounting		fixing: socket head screw M3
Materials		Protective cover: diecast zinc coated; screws: stainless steel
Accessories		
Items supplied		socket head screws: 2 x SW 1,5
Remarks		
Pack quantity		1 pcs.