Datasheet - MZM 100 ST2-SD2PRE-A

Solenoid interlock / MZM 100

☒ Preferred typ



(Minor differences between the printed image and the original product may exist!)

- Guard locking monitored
- Automatic latching
- Solenoid interlocks (for the protection of man) with innovating and unique operating principle
- 40 mm x 179 mm x 40 mm
- Electronic contact-free, coded system
- thermoplastic enclosure
- Max. length of the sensor chain 200 m
- 3 LEDs to show operating conditions
- Sensor technology permits an offset between actuator and interlock of ± 5 mm vertically and ± 3 mm horizontally
- Intelligent diagnosis
- Self-monitoring series-wiring of 31 sensors
- Patented
- Connector M12, 8-pole
- Power to lock
- serial diagnostic output

Ordering details

Product type description	MZM 100 ST2-SD2PRE-A
Article number	101211145
EAN code	4030661389479
eCl@ss	27-27-26-03

Approval

Approval	BG USA/CAN

Classification

Standards	EN ISO 13849-1, IEC 61508, IEC 60947-5-3, EN 60947-5-1
PL	e
Control category	up 4
PFH	3.5 x 10^{-9}/h
SIL	up 3
Mission time	20 Years
Classification	PDF-M

Global Properties

Product name	MZM 100
Standards	IEC 61508, EN ISO 13849-1, EN ISO 13849-1
Compliance with the Directives (Y/N) CE	Yes
Suitable for safety functions (Y/N)	Yes
Protection rating	II
Series-wiring	up to 31 components
Length of the sensor chain	max. 200 m
− without detriment to the category to EN ISO 13849-1	
Active principle	inductive
Duty cycle	100 %
Materials	
- Material of the housings	Plastic, glass-fibre reinforced thermoplastic
Housing coating	None
Weight	660 g
Guard locking monitored (Y/N)	Yes
Actuator monitored (Y/N)	No
Idle assignable pushbutton and LED (Y/N)	No
Reaction time	< 150 ms
Duration of risk	< 150 ms
Time to readiness	< 4000 ms
Recommended actuator	MZM 100-B1.1

Mechanical data

Design of electrical connection	Connector M12, 8-pole
Mechanical life	≥ 1.000.000 operations
notice - Mechanical life	operations for guards ≤ 5 kg; actuating speed $\leq 0{,}5$ m/s
restistance to shock	30 g / 11 ms
Resistance to vibration	10 … 150 Hz, Amplitude 0,35 mm
Emergency unlocking device (Y/N)	No
Manual release (Y/N)	No
Emergency release (Y/N)	No
Latching (Y/N)	Yes
electrically adjustable latching force	30 N … 100 N
Permanent magnet	-
Clamping force F_{max}	
- typically	750 N
- guaranteed	500 N

Ambient conditions

Ambient temperature	
- Min. environmental temperature	−25 °C
- Max. environmental temperature	+55 °C
Storage and transport temperature	
- Min. Storage and transport temperature	−25 °C
- Max. Storage and transport temperature	+85 °C
Relative humidity	30% ... 95%
- non-condensing	
- non-icing	
Protection class	IP67 to IEC/EN 60529
Air clearances and creepage distances To IEC/EN 60664-1	

- Rated impulse withstand voltage U_{imp}	0,8 kV
- Overvoltage category	III
- Degree of pollution	3

Electrical data

Number of auxiliary contacts	0 piece
Number of safety contacts	2 piece
Cross circuit/short circuit recognition possible (Y/N)	Yes
Power to unlock	No
Power to lock	Yes
Supply voltage U_B (stabilised PELV)	
- Min. supply voltage	20.4 VDC
- Max. supply voltage	26.4 VDC
Switch frequency	1 Hz
Rated insulation voltage U_i	32 VDC
Operating current I_e	1 A
Utilisation category	DC-13
No-load current I_0	max. 0,5 A
Required rated short-circuit current	100 A
Device insulation	≤ 2 A (if used in accordance with UL 508)
notice	Cable length and cable section alter the voltage drop depending on the output current

Electrical data - Safety inputs

Safety inputs	X1 and X2
Rated operating voltage U_e	−3 V … 5 V (Low) 15 V … 30 V (High)
Operating current I_e	> 2 mA / 24 V

Electrical data - Safety outputs

Safety outputs	Y1 and Y2
Fuse rating	short-circuit proof, p-type
Rated operating voltage	0 V ... 4 V under Supply voltage U_B
Residual current I_r	≤ 0,5 mA
Operating current I_e	0,25 A
Utilisation category	DC-12, DC-13

Electrical data - Diagnostic output

Serial diagnostics (Y/N)	Yes
Wiring capacitance for serial diagnostics	50 nF
diagnostic signals	to SD-interface
Operating principle of the diagnostic output	The short-circuit proof diagnostic output OUT can be used for central visualisation or control tasks, e.g. in a PLC.
notice	The diagnostic output is not a safety-relevant output!

Electrical data - Solenoid control IN

Control command	Interlocking the solenoid interlock

LED switching conditions display

LED switching conditions display (Y/N)	Yes
LED switching conditions display	
- Supply voltage U_B	green LED
- switching condition	yellow LED
- Error functional defect	red LED

ATEX

Explosion protection categories for gases	None
Explosion protected category for dusts	None

Dimensions

Dimensions of the sensor	
- Width of sensor	40 mm
- Height of sensor	179 mm
- Length of sensor	40 mm

Pin assignment

1	A1 Supply voltage U_B
2	X1 Safety input 1
3	A2 GND
4	Y1 Safety output 1
5	OUT serial diagnostic output
6	X2 Safety input 2
7	Y2 Safety output 2
8	IN serial diagnostic input
9	without function

notice

As lons as the actuating unit remains inserted in the solenoid interlock, the unlocked safety guard can be relocked. The safety outputs then will be enabled again; opening the safety guard therefore is not required.

Included in delivery

Actuators must be ordered separately.

Ordering code

MZM 100

Guard locking monitored

MZM 100 (1)-(2)(3)(4)-A

(1)	
ST	connector M23, (8 + 1-pole)
ST2	connector M12, 8-pole
(2)	
1P2PW	1 Diagnostic output and 2 Safety outputs, p-type, combined diagnostic signal: guard door closed and interlocking device locked
SD2P	serial diagnostic output and 2 Safety outputs, p-type
(3)	

without	without Latching force
RE	electrically adjustable latching force 30 … 100 N
(4)	
M	Permanent magnet approx. 30 N
	Actuator monitored
	MZM 100 B (1)-(2)RE(3)-A
(1)	
ST	connector M23, (8 + 1-pole)
ST2	connector M12, 8-pole
(2)	
1P2PW2	1 diagnostic output and 2 safety outputs, all p-type and combined diagnostic signal: safety guard closed and solenoid interlock locked.
SD2P	serial diagnostic output and 2 Safety outputs, p-type
(3)	
M	Permanent magnet approx. 30 N
	Indication legend
B	Actuator monitored
RE	electrically adjustable latching force 30 … 100 N
A	Power to lock

Documents

Operating instructions and Declaration of conformity (pt) 349 kB, 27.01.2012
Code: mrl_mzm100_pt

Operating instructions and Declaration of conformity (fr) 316 kB, 03.06.2013
Code: mrl_mzm100_fr

Operating instructions and Declaration of conformity (de) 325 kB, 21.11.2012
Code: mrl_mzm100_de

Operating instructions and Declaration of conformity (en) 321 kB, 21.11.2012
Code: mrl_mzm100_en

Operating instructions and Declaration of conformity (nl) 322 kB, 14.01.2013
Code: mrl_mzm100_nl

Operating instructions and Declaration of conformity (it) 322 kB, 29.11.2012
Code: mrl_mzm100_it

Operating instructions and Declaration of conformity (jp) 610 kB, 14.01.2013
Code: mrl_mzm100_jp

Operating instructions and Declaration of conformity (it) 322 kB, 29.11.2012
Code: mrl_mzm100_it

Operating instructions and Declaration of conformity (pl) 354 kB, 02.12.2014
Code: mrl_mzm100_pl

Operating instructions and Declaration of conformity (es) 906 kB, 28.06.2011
Code: mrl_mzm100_es

Operating instructions and Declaration of conformity (cn) 446 kB, 27.05.2015

Code: mrl_mzm100_cn

Wiring example (de) 41 kB, 29.09.2009
Code: kmzm1p01

Wiring example (99) 19 kB, 22.01.2009
Code: kmzm1l04

BG-test certificate (de) 2 MB, 26.08.2014
Code: z_mzmp03

Images

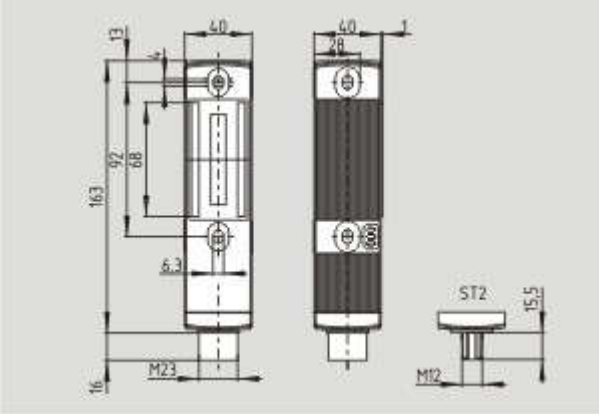

Dimensional drawing (basic component)

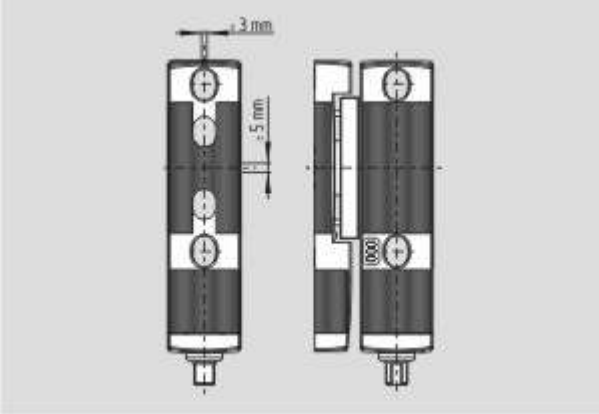

Dimensional drawing (miscellaneous)

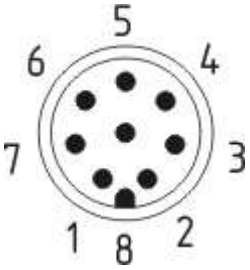

Contact arrangement

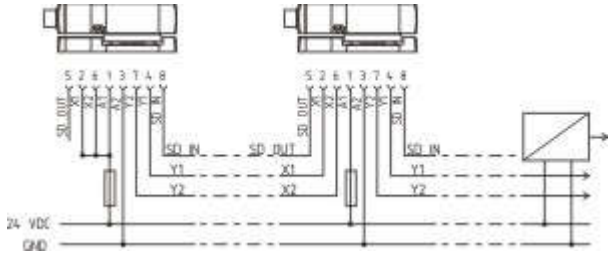

Wiring example

System components

Actuator



101204290 - MZM 100-B1.1

• actuator free from play
• i.e. neutralisation of undesired noises

Accessories



101210642 - MZM 100 TARGET

• for the variable setting of the latching force
• gradually adjustable by steps of approx. 10 N within a range from approx. 30 N to 100 N



101185510 - MS MZM 100-W

Connector



A-K8M12

• Pre-wired cable
• 8-pole