EIO330

IO-Link Bluetooth adapter

IO-LINK BLUETOOTH ADAPTER MULTI RW

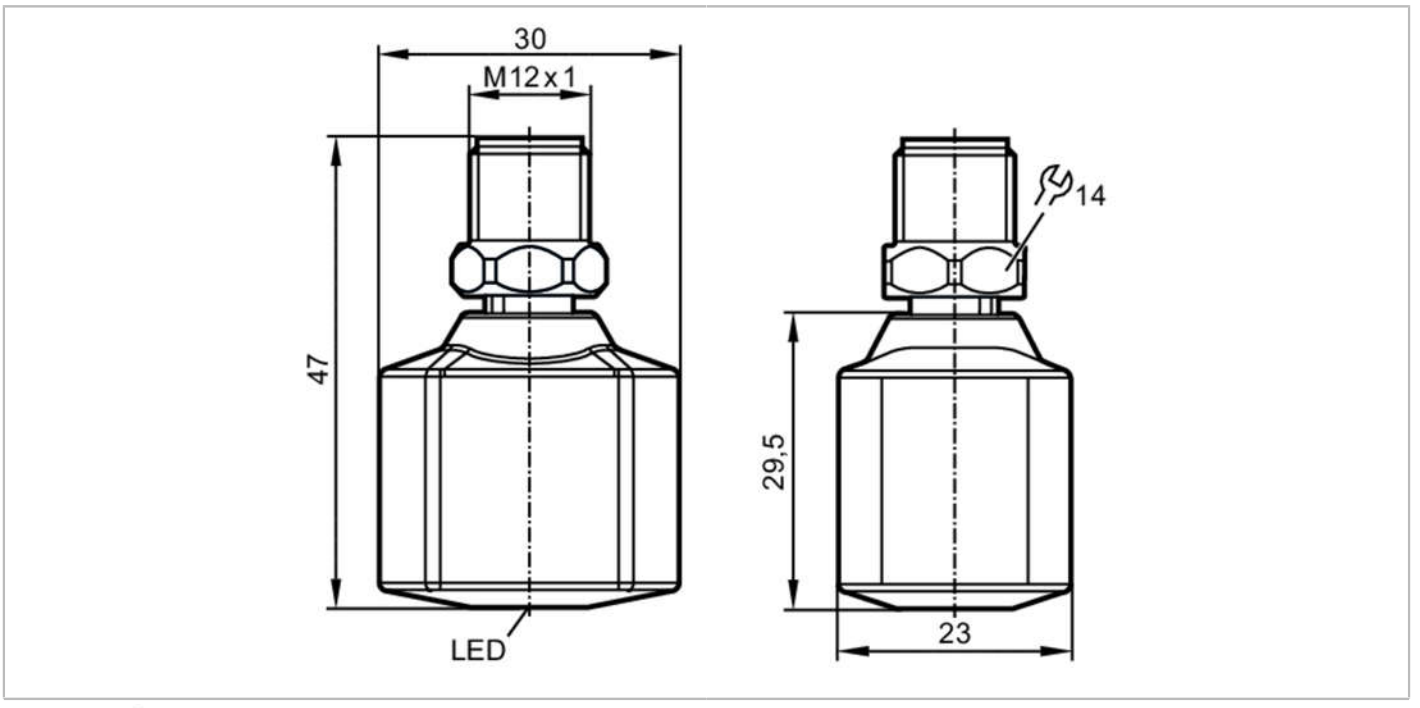

Application		
Special feature		Gold-plated contacts
Application		display of all process values of the sensors connected to the same master; device setup and diagnosis; parameter setting and analysis of units; Nur funktionsfähig mit ifm IO-Link Master ab Firmware 2.1
Radio approval for		EU/RED; Australia; USA; New Zealand; Canada; Japan; Brazil; China; South Africa; Argentina; Singapore; Mexico; Malaysia; Vietnam; Chile; Thailand; Taiwan; South Korea; India; Namibia; Indonesia
Note on radio approval		The list of countries applying the European Radio Equipment Directive 2014/53/EU (RED) can be found under “Downloads”.
Electrical data		
Operating voltage	[V]	18...30 DC
Nominal voltage DC	[V]	24
Current consumption	[mA]	< 30
Protection class		III
Reverse polarity protection		yes
Power-on delay time	[s]	for IO-Link communication < 0,3; Bluetooth < 1
IO-Link Device		
Power-on delay time	[s]	< 0.3
Software / programming		
Parameter setting options		process value recording
Interfaces		
Communication interface		IO-Link; Bluetooth
Supported DeviceIDs		**Type of operation** / **DeviceID**
		IO-Link Device / 1313

EIO330

IO-Link Bluetooth adapter

IO-LINK BLUETOOTH ADAPTER MULTI RW

Bluetooth			
Transmission standard		BLE 4.0; BLE 4.1; BLE 4.2; EDR 2.0; EDR 2.1	
Frequency band		2,4 - 2,482 GHz	
Transmission power	[mW]	10; (10 dBm)	
Range		typ. 20 m	
IO-Link Device			
Transmission type		COM3 (230,4 kBaud)	
IO-Link revision		1.1	
SDCI standard		IEC 61131-9	
Profiles		Function	Device identification
		Function	Device diagnosis
		Function	Extended identification
Required master port type		A	
Min. process cycle time	[ms]	2.3	
Operating conditions			
Ambient temperature	[°C]	-25...60	
Storage temperature	[°C]	-40...70	
Protection		IP 67; IP 69K	
Tests / approvals			
EMC		DIN EN 61000-6-2	
		DIN EN 61000-6-3	in a closed metal tank
Shock resistance		DIN EN 60068-2-27	15 g (6 ms)
Vibration resistance		DIN EN 60068-2-6	2 g (10...150 Hz)
MTTF	[years]	281	
UL approval		Ta	max. 55 °C
		Enclosure type	Type 1
		power supply	Low Voltage / Limited Energy
		File number UL	E205959
Mechanical data			
Weight	[g]	94	
Materials		stainless steel (316L/1.4404); PA; Sealing: FKM;	
Displays / operating elements			
Display		operation Bluetooth failure	1 x LED, three-colour
Remarks			
Remarks		the device complies with overvoltage category II	
Pack quantity		1 pcs.	

EIO330

IO-Link Bluetooth adapter

IO-LINK BLUETOOTH ADAPTER MULTI RW

Electrical connection

Connector: 1 x M12; coding: A; Contacts: gold-plated

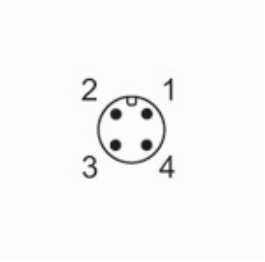

Connection

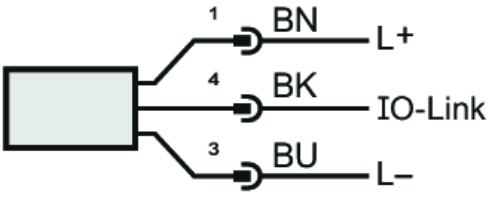

colours to DIN EN 60947-5-2
Core colours :

BK =	black
BN =	brown
BU =	blue