B5010207

Bottom and top part R110 F

Assembly unit: With bayonet lock, snapping into place. If required securing using 2 screws. Screw pillars for PCBs in bottom and top part. Screw pillars for battery compartment (acc.) in bottom part. Top part with recessed area for membrane keyboards. End piece (lid / battery compartment lid / base / base 30° or base 55°) required for bottom part - see separate article.

Version
Bottom part "inclined"

Supply
1 top and bottom part R110 F, assembly kit



TECHNICAL DATA

Material	ABS (UL 94 HB)
Colour	off-white RAL 9002
Standards	RoHS compliant, REACH compliant

Diameter	⌀ 110 mm
Height	38 mm
PCB diameter, base	⌀82 mm
Keypad diameter	⌀72 mm

Please take the dimensions from current parts. These are subject to material- and manufacturing-specific tolerances.

PURCHASING DATA

Weight/1 part	42 g
Customs tariff number (OKW product)	39269097
Country of manufacture	Germany

CUSTOMISING OPTIONS

B5010207

Bottom and top part R110 F

What else do you need to create your own personal product? We can supply our enclosures and tuning knobs fully modified to suit your electronic components and design requirements. Please advise for anything else we can do for you.

Customising options for B5010207


Machining


Lacquering



Printing



Laser marking



Decor foils


Special material


EMC shielding


Installation / Assembly of accessories

B5010207

Bottom and top part R110 F

SYSTEM COMPONENTS TO COMPLETE



B5011117
Base
ABS (UL 94 HB)
off-white RAL 9002



B5011217
Base 30°
ABS (UL 94 HB)
off-white RAL 9002



B5011317
Base 55°
ABS (UL 94 HB)
off-white RAL 9002



B5011847
Lid
ABS (UL 94 HB)
off-white RAL 9002



B5011857
Battery compartment lid
ABS (UL 94 HB)
off-white RAL 9002

ACCESSORY "BATTERY"



A9166001
Set of battery clips, 2 x AAA
Steel
tin-plated



A9166002
Battery contact, 2 x AAA
Steel
tin-plated



A9166003
Battery holder, 2 x AAA
PA 6 (UL 94 HB)
black RAL 9005



A9190002
Set of battery clips,
2xN/2xAA/2xAAA
Steel
tin-plated



B5111107
Battery compartment, 2 x AAA
ABS (UL 94 HB)
off-white RAL 9002

B5010207

Bottom and top part R110 F

ACCESSORY "PROTECTION"



A9199005
Strain relief
PA 6
volcano



B5111707
Anti-rotation device
ABS (UL 94 HB)
off-white RAL 9002

ACCESSORY "WALL/HOLDER"



B5111307
Wall mounting set
ABS (UL 94 HB)
off-white RAL 9002

ACCESSORY "SCREWS"



B5111201
Set of screws

ACCESSORY



A9207150
Anti-slide feet 6.5 x 2 mm
transparent

B5010207

Bottom and top part R110 F

Subject to technical modification without notice. © by OKW Gehäusesysteme, Buchen/Germany.

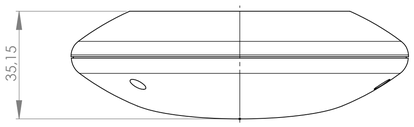

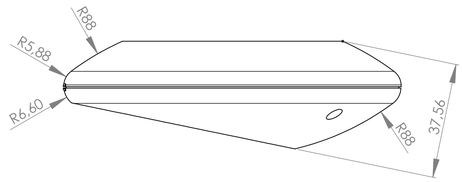

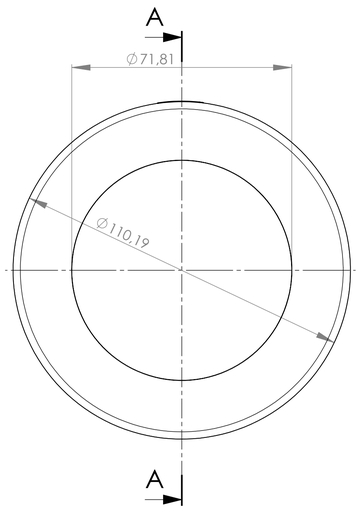

SCHNITT A-A
Oberteil und Unterteil
top part and bottom part

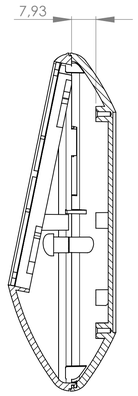

SCHNITT A-A
mit Deckel zum Verschrauben
with screwed-down lid

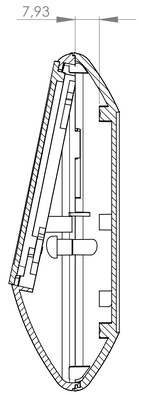

SCHNITT A-A
mit Batteriefachdeckel zum Verschrauben
with battery compartment lid screw-down

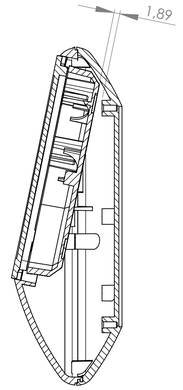

SCHNITT A-A
mit Sockel
with base

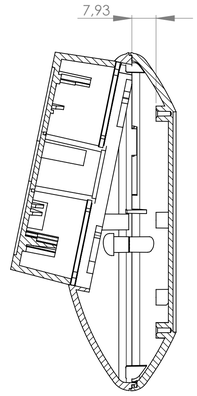

SCHNITT A-A
mit Sockel 30°
with base with 30° inclination

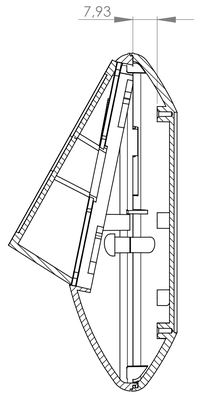

SCHNITT A-A
mit Sockel 55°
with base with 55° inclination

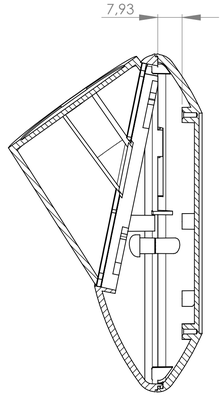

Platine
P C B

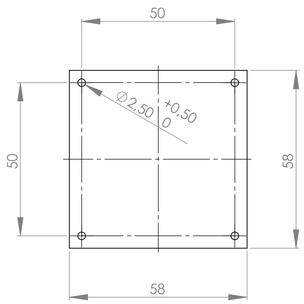

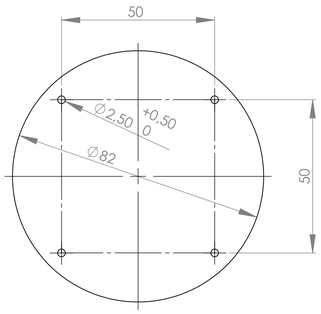

Unterteil-Innenansicht
Bottom-Part-Inside-View

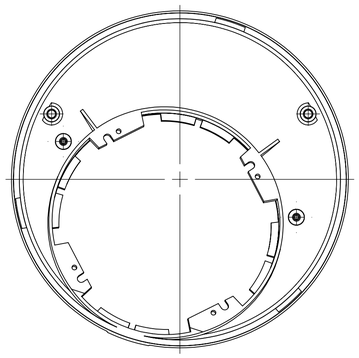

Oberteil-Innenansicht
Top-Part-Inside-View

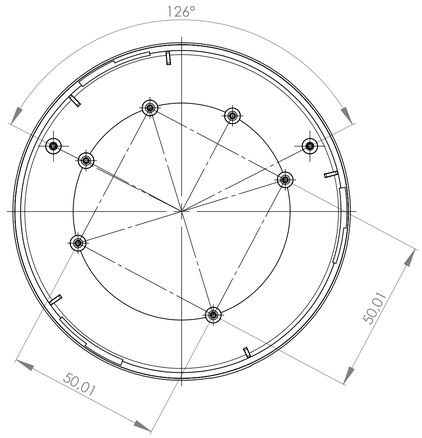

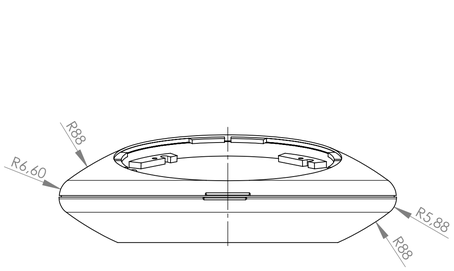

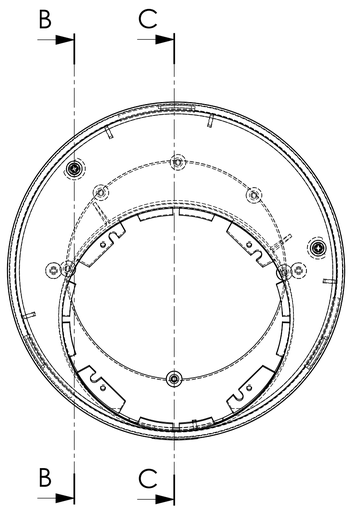

SCHNITT B-B

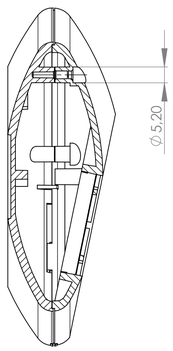

SCHNITT C-C

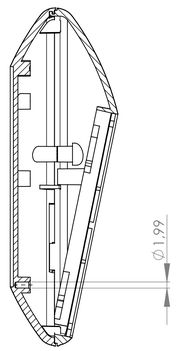

Folientastatur
membrane keyboard

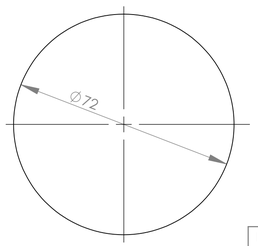

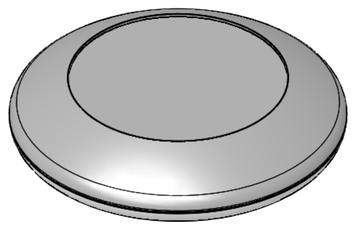

Bitte die Maße an aktuellen Teilen abnehmen.
Diese unterliegen material- und produktionsspezifischen Fertigungstoleranzen.

Please take the dimensions from current parts.
These are subject to material- and manufacturing-specific tolerances.

Informationskopie
wird nicht aktualisiert
Copy for Information
will not be updated

Technische Änderungen vorbehalten. Irrtümer oder Druckfehler begründen keinen Anspruch auf Schadenersatz. Wichtige Einbaumaße bitte direkt mit dem aktuellen Produkt abstimmen.

Subject to technical modification without prior notice. Typographical and other errors do not justify any claim for damages. All dimensions should be verified using an actual moulded part.

Sous reserve de modifications techniques. Toute erreur ou faute d'impression ne justifie aucune demande d'indemnisation. Nous prions les clients de vérifier les dimensions des composants avec les boîtiers avant le montage.

Erst. am:	16.06.2009	Toleranzen:	Status:
Erst. von:	Herrlich	DIN 16901 T130	SERIENFREIGABE
Freig. am:	19.09.2013	Volumen:	Zeichnungsart:
Freig. von:	D. Hasselbach		KUNDE
Revision:	01		DIN 6 Teil 2

This document contains proprietary information of OKW Gehäusesysteme GmbH and is tendered subject to the conditions that the information be retained in confidence not be reproduced or copied and not be used or incorporated in any product.

OKW GEHÄUSE SYSTEME

ART-CASE R110
F

B501020*

M 1:1

Für dieses Dokument behalten wir uns alle Urheberrechte vor. Es darf auch auszugsweise weder vervielfältigt noch Dritten in irgendeiner Form zugänglich gemacht werden.

Dateiname: 00011575