45x45x10 mm

9.2~11 CFM



MAGLev by SUNON	Bearing ● VAPO	Rating Voltage (VDC)	Power Current (mA)	Power Consumption (WATTS)	Speed (RPM)	Air Flow (CFM)	Static Pressure (Inch-H_2O)	Noise (dBA)	Weight (g)	Curve
ME45100V1-0000-A99	●	5	223	1.12	6000	11.0	0.17	32.0	16.0	2
MB45100V2-0000-A99	●	5	230	1.15	5000	9.2	0.12	27.0	19.0	4
ME45101V1-0000-A99	●	12	110	1.32	6500	11.8	0.18	32.5	16.0	1
MB45101V2-0000-A99	●	12	105	1.26	5000	9.2	0.12	27.0	18.5	4

Model	◔ 2BALL ○ Sleeve	(VDC)	(mA)	(WATTS)	(RPM)	(CFM)	(Inch-H_2O)	(dBA)	(g)	Curve
EE45100S1-0000-999	○	5	260	1.30	6000	11.0	0.17	32.0	16.0	2
EB45100S2-0000-999	○	5	240	1.20	5000	9.2	0.12	27.0	19.0	4
EE45101S1-0000-999	○	12	110	1.32	5700	10.5	0.16	31.0	16.0	3
EB45101S2-0000-999	○	12	120	1.44	5000	9.2	0.12	27.0	18.5	4

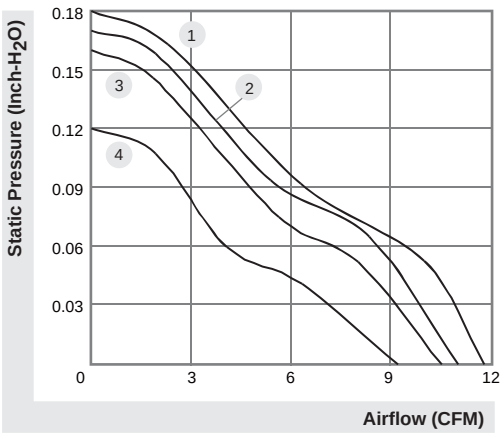

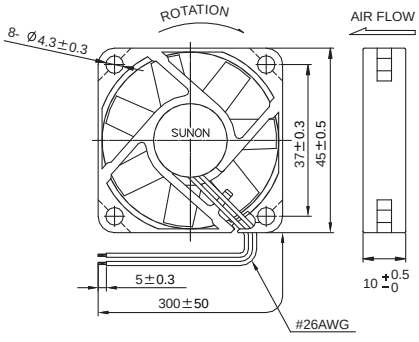

(Units : mm)

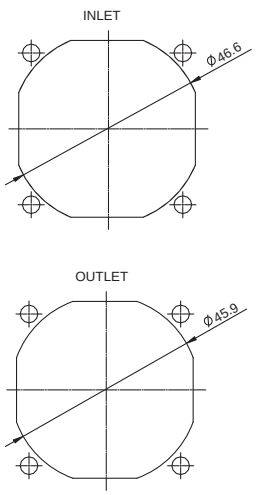

*All model could be customized. Please contact with Sunon Sales.
*Specifications are subject to change without notice. Please Visit SUNON web site at http://www.sunon.com for update information.