Ultrasonic sensor
UB500-F42-I-V15



Features

- Analogue output 4 V ... 20 mA
- Extremely small unusable area
- TEACH-IN
- Interference suppression (adjustable switching treshold tracking and angle of divergence of sound beam)
- Temperature compensation
- Synchronisation options
- Mode of operation adjustable

Electrical connection

Standard symbol/Connections:
(version I)

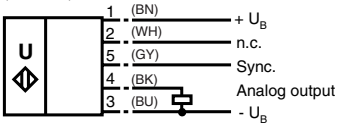

Core colours in accordance with EN 60947-5-2.

Connector V15



Dimensions

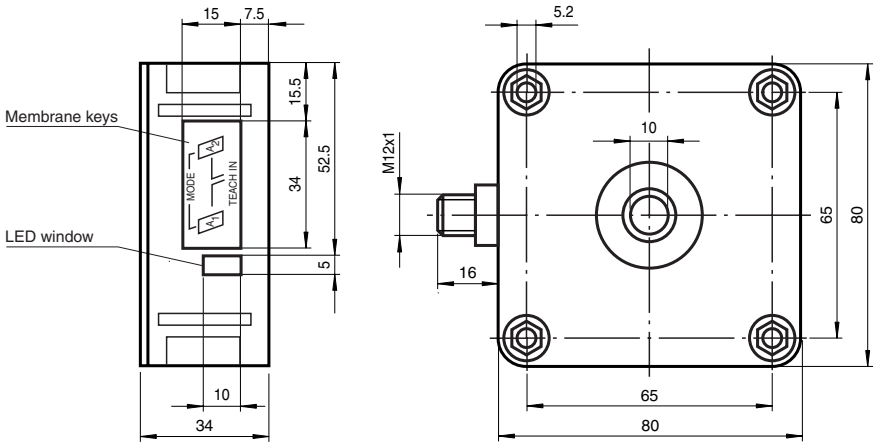

CE

Technical data

General specifications	
Sensing range	30 ... 500 mm
Adjustment range	50 ... 500 mm
Unusable area	0 ... 30 mm
Standard target plate	100 mm x 100 mm
Transducer frequency	approx. 390 kHz
Response delay	approx. 50 ms
Indicators/operating means	
LED green	permanently green: Power on
LED yellow	permanent: object in evaluation range flashing: TEACH-IN function
LED red	normal operation: "fault" TEACH-IN function: no object detected
Electrical specifications	
Operating voltage	10 ... 30 V DC , ripple 10 $\%_{SS}$
No-load supply current I_0	≤ 50 mA
Input/Output	
Synchronisation	bi-directional 0 level -U_B...+1 V 1 level: +4 V...+U_B input impedance: > 12 KOhm synchronisation pulse: ≥ 100 µs, synchronisation interpulse period: ≥ 2 ms
Synchronisation frequency	
Common mode operation	≤ 95 Hz
Multiplex operation	≤ 95/n Hz, n = number of sensors
Output	
Output type	1 analogue output 4 ... 20 mA
Resolution	0,2 mm for max. detection range
Deviation of the characteristic curve	± 1 % of full-scale value
Repeat accuracy	± 0,1 % of full-scale value
Load impedance	0 ... 300 Ohm
Temperature influence	± 1 % of full-scale value
Standard conformity	
Standards	EN 60947-5-2
Ambient conditions	
Ambient temperature	-25 ... 70 °C (248 ... 343 K)
Storage temperature	-40 ... 85 °C (233 ... 358 K)
Mechanical specifications	
Protection degree	IP65
Connection	connector V15 (M12 x 1), 5 pin
Material	
Housing	PBT
Transducer	epoxy resin/hollow glass sphere mixture; foam polyurethane, cover PBT
Mass	140 g

113853_ENG.xml
2003-03-25

Subject to reasonable modifications due to technical advances.
Copyright Pepperl+Fuchs, Printed in Germany
Pepperl+Fuchs Group • Tel.: Germany +49 621 776-0 • USA +1 330 4253555 • Singapore +65 67799091 • Internet http://www.pepperl-fuchs.com

Notes

Parameterization:

You can use 2 keys to parameterize the sensor. In order to start the evaluation limit 1 learning mode, press the A1 key; in order to start the evaluation limit 2 learning mode, press the A1 key.

If you keep both keys pressed as you switch on the power supply, the sensor will switch over to the sensitivity adjustment mode of operation.

In case the parameterization procedure is not completed within 5 minutes, the sensor will discontinue the process and retain all previous settings.

Teaching in evaluation limits:

Teaching in A1 evaluation limit by pressing the A1 key.	
Keep A1 key > pressed for 2 s	The sensor enters the evaluation limit 1 learning mode
Position target object in the desired distance	The sensor indicates via LED lights whether the target object has been detected. In case the object has been detected, the yellow LED will flash; if the object has not been detected, the red LED flashes.
Briefly press the A1 key	The sensor completes the evaluation limit 1 teach-in process and saves this value in non-volatile memory. In the event of an uncertain object (flashing red LED), the value learned is invalid. The system exits the teach-in mode.

Analogously, the A2 evaluation limit is learned in the same fashion as described above using the A2 key.

Suppression of disturbing targets

Some types of installation or particular conditions during operation of an ultrasonic sensor may admit that undesired objects (such as shelf brow posts, edges of machines) are closer than the actual target as they enter the recording range. In this case, the sensor would normally detect these objects rather than the desired target. So in order to ensure an error-free operation, in may be necessary to suppress those objects.

Objects can be suppressed if they meet the following conditions:

- The disturbing target must not hide the actual target completely.
- The amplitude of the disturbing signal must be smaller than the amplitude of the desired signal.
- The disturbing target must remain in the edge region of the sound lobe and must not enter its center.

Sound lobe

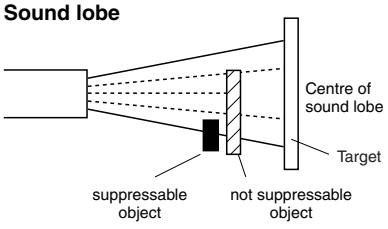

The suppression of the disturbing target is effected through reduction of the response sensitivity. This figure shows its effect on the response characteristics of the sensor. The sensor is preset on step 1 by the manufacturer.

Model number

UB500-F42-I-V15

Characteristic curves/additional information

Characteristic response curve

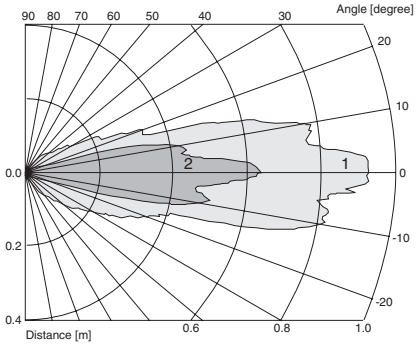

Curve 1: flat surface 100 mm x 100 mm
Curve 2: round bar, Ø 25 mm

Analogue output programmation

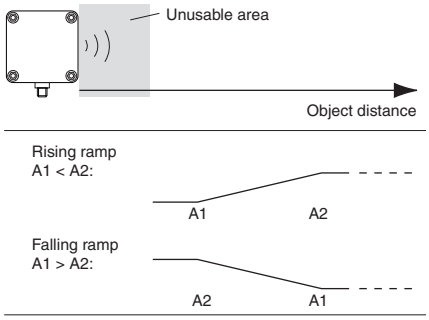

Note:
If A1 = A2, the output works like A1 < A2

Accessories

Mounting aids

MH 04-3505

Process indication- and control unit

DA5-IU-2K-V

Cable sockets *)

V15-G-2M-PVC
V15-W-2M-PUR

*) For additional cable sockets see section „Accessories“.

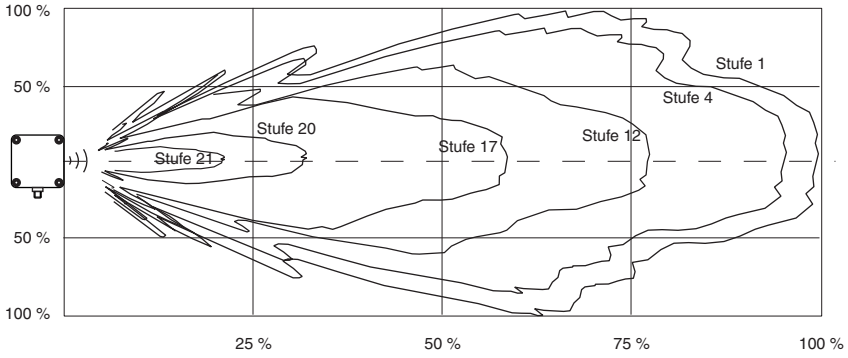

Sensitivity adjustment for suppression of disturbing targets

Remove the actual target object from the detection range.

Keep A1 and A2 keys pressed as you switch on power supply	The sensor enters the sensitivity adjustment mode of operation. The sensor sensitivity can be adjusted in 24 steps. Step 1 = high response Step 24 = low response
Briefly press the A1 key	Response is increased. The LED lights indicate the actual state of the sensor. - flashing red: no disturbing target detected - flashing yellow: disturbing target detected - permanent red: upper setting limit is reached.
Briefly press the A2 key	Response is decreased. The LED lights indicate the actual state of the sensor. - flashing red: no disturbing target detected - flashing yellow: disturbing target detected - permanent red: lower setting limit is reached
Press both A1 and A2 keys at once	Exiting sensitivity adjustment. The sensor response is saved in non-volatile memory. In the event the sensitivity adjustment is not exited through this procedure, the sensor will exit this operation mode automatically after 5 minutes, and the previous sensitivity value remains valid.

Synchronization

In order to prevent conflicts, the sensor is equipped with a synchronization connection. In case this is unwired, the sensor function is based on an intern clock rate. Several sensors can be synchronized through the following methods:

External synchronization:
The sensor can be synchronized by application of external square wave voltage. A synchronizing pulse at the synchronization input triggers a measuring cycle. The pulse width needs to be bigger than 100µs. The measuring cycle is started with the falling edge. A low level > 1 s or an open synchronization input causes the sensor to operate at normal operating mode. A high level at the synchronization input deactivates the sensor.

There are two possible operation modes:
- Several sensors are controlled by the same synchronization signal. The sensors function in common mode.
- The respective synchronizing pulses are directed to just one sensor each cyclically. The sensors function in multiplex mode.

Self synchronization:
The synchronization connections of up to 5 sensors offering a self synchronization option are interconnected. After switching on power supply, these sensors function in the multiplex mode. The response delay increases according to the number of sensors to be synchronized. During the teach-in process no synchronization can be performed and vice versa. For teaching in switch points, the sensors need to be operated in an unsynchronized state.

Note:

If the option for synchronization is not used, the synchronization input has to be connected to ground (0V) or the sensor has to be operated via a V1 cable connector (4-pin).

Copyright Pepperl+Fuchs, Printed in Germany