NU 1008 ML

Popular item

Dimensions

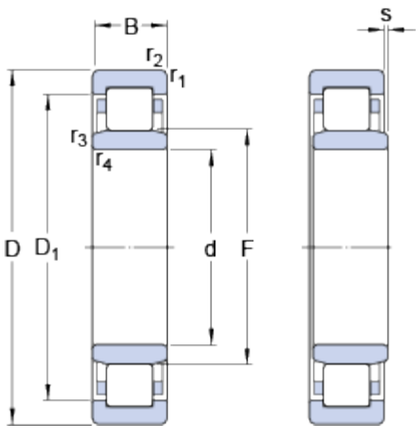

D		68	mm
B		15	mm
D_1	≈	57.6	mm
$r_{1,2}$	min.	1	mm
s	max.	2.4	mm

Abutment dimensions

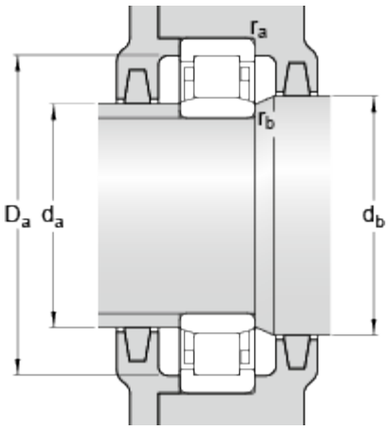

d_a	min.	43	mm
d_a	max.	46	mm
d_b	min.	49	mm
D_a	max.	62.3	mm
r_a	max.	1	mm
r_b	max.	0.6	mm

Calculation data

Basic dynamic load rating	C	25.1	kN
Basic static load rating	C_0	26	kN
Fatigue load limit	P_u	3	kN
Reference speed		12000	r/min
Limiting speed		18000	r/min
Calculation factor	k_r	0.15	
Limiting value	e	0.2	
Axial load factor	Y	0.6	

Mass

Mass bearing	0.23	kg