E20053

Fibre optic diffuse reflection sensor

FT-00-P-V-E1

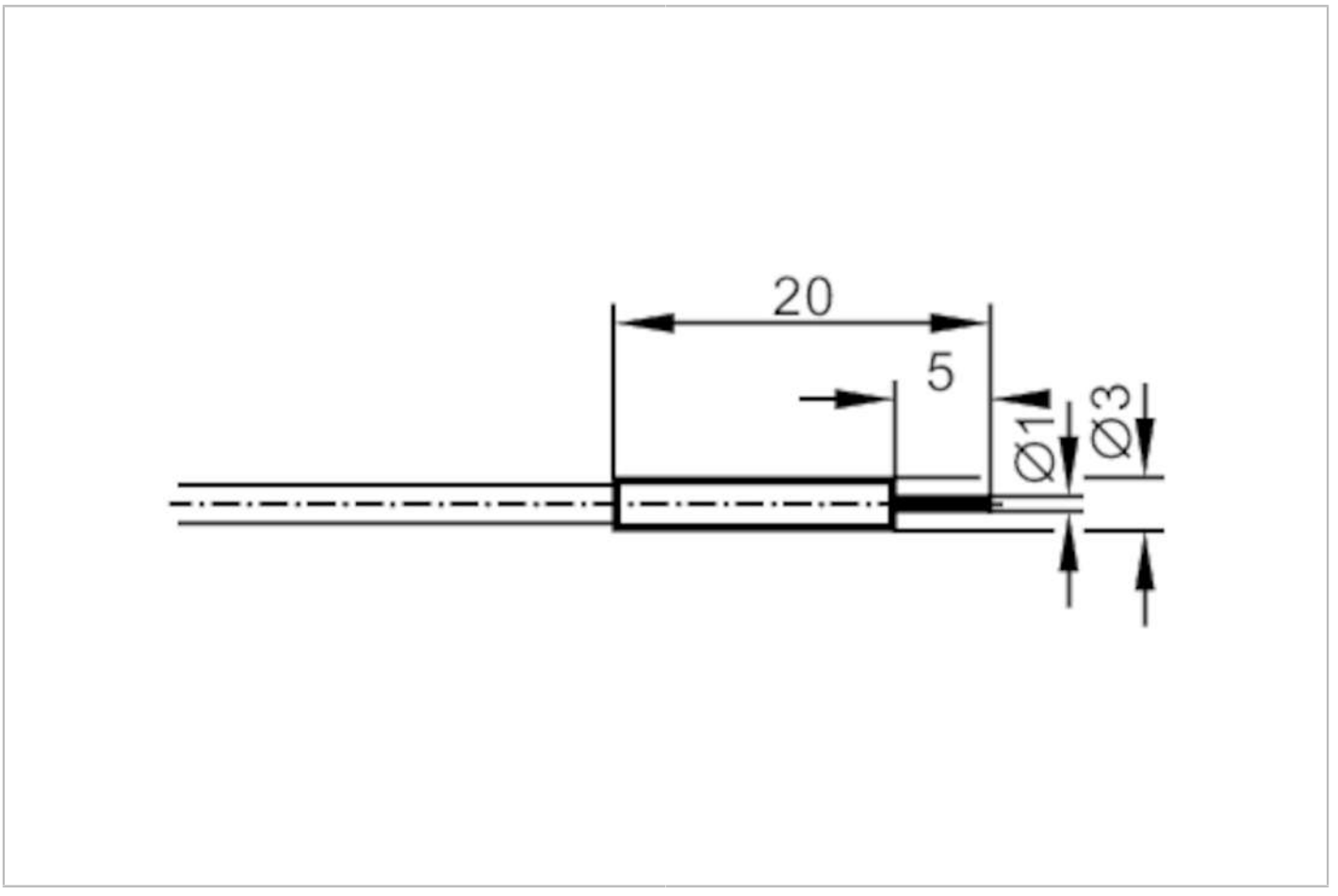

Application		
Function principle		Diffuse reflection sensor
Application		For use in industrial environments
Detection zone		
Range with fibre optic amplifier type		OCF; OKF; OOF; OUF
OCF (High Power)		
Range fibre optics	[mm]	40
OKF		
Range fibre optics	[mm]	8
OOF		
Range fibre optics	[mm]	24
OUF		
Range fibre optics	[mm]	8
Operating conditions		
Ambient temperature	[°C]	-20...80
Mechanical data		
Weight	[g]	37.5
Version of sensing head		straight
Sensing head diameter	[mm]	1

E20053

Fibre optic diffuse reflection sensor

FT-00-P-V-E1

Sensing head length	[mm]	5
Total length	[mm]	600
Min. bending radius	[mm]	20
Fibre arrangement		
Materials		Adapter: PPE
Fibre material		glass
Fibre head material		stainless steel (1.4305 / 303)
Fibre sheath material		PVC
Accessories		
Items supplied		Mounting clamp:, E20107
Remarks		
Pack quantity		1 pcs.