ROP524

Incremental encoder with hollow shaft and display

INCREMENTAL ENCODER PERFORMANCE LINE

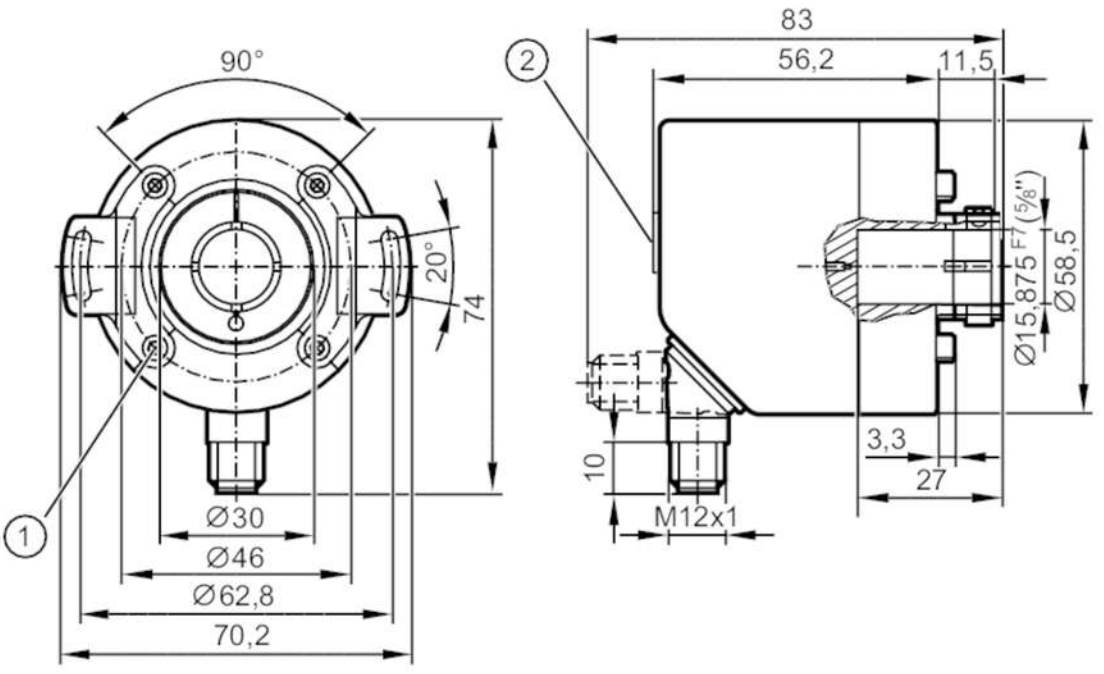

1 M3
2 display

Product characteristics		
Resolution		1...10000; (parameterisable; Factory setting: 1024) resolution
Communication interface		IO-Link
Shaft design		hollow shaft open to one side
Shaft diameter	[mm]	15.875
Application		
Function principle		incremental
Detection system		magnetic
Application		encoder; Speed monitor; counter
Electrical data		
Operating voltage	[V]	4.75...30 DC
Current consumption	[mA]	< 350
Protection class		III
Reverse polarity protection		yes
Max. revolution electrical	[U/min]	12000
Outputs		
Electrical design		HTL/TTL
Switching frequency	[kHz]	1000
Factory setting		Output function: HTL (50 mA)
Short-circuit protection		yes
Phase difference A and B	[°]	90
Measuring/setting range		
Resolution		1...10000; (parameterisable; Factory setting: 1024) resolution

ROP524

Incremental encoder with hollow shaft and display

INCREMENTAL ENCODER PERFORMANCE LINE

Speed monitor			
Set point SP		-9994...9999 U/min	-166.6...166.7 Hz
Reset point rP		-9999...9994 U/min	-166.7...166.6 Hz
Counter			
Preset point		1...9999	
Accuracy / deviations			
Accuracy	[°]	0.1	
Software / programming			
Parameter setting options		encoder; Resolution; direction of rotation; HTL; TTL; Speed monitor; Resolution	
Interfaces			
Communication interface		IO-Link	
Transmission type		COM2 (38,4 kBaud)	
IO-Link revision		1.1	
SIO mode		yes	
Min. process cycle time	[ms]	2.3	
Operating conditions			
Ambient temperature	[°C]	-40...85	
Storage temperature	[°C]	-40...85	
Max. relative air humidity	[%]	95; (condensation not permissible)	
Protection		IP 65; (on the housing: IP 67; on the shaft: IP 65)	
Tests / approvals			
Shock resistance			100 g
Vibration resistance			20 g
MTTF	[years]	218	
Mechanical data			
Weight	[g]	465.5	
Dimensions	[mm]	Ø 58.5 / L = 69	
Materials		flange: aluminium; housing: stainless steel (444/1.4521); display window: PEI	
Max. revolution, mechanical	[U/min]	12000	
Max. starting torque	[Nm]	2	
Reference temperature torque	[°C]	20	
Shaft design		hollow shaft open to one side	
Shaft diameter	[mm]	15.875	
Shaft material		stainless steel	
Installation depth of shaft	[mm]	27	
Max. axial shaft misalignment	[mm]	0,5	
Fixing flange		Ø 58.5 mm	
Displays / operating elements			
Display			10-segment display, red/green 4-digit parameterisable
			2 x LED, yellow
			5 x LED, green

ROP524

Incremental encoder with hollow shaft and display

INCREMENTAL ENCODER PERFORMANCE LINE

Accessories

Items supplied	Stator coupling: 2

Electrical connection

Connector: 1 x M12, radial, can also be used axially; coding: A; Moulded body: stainless steel (316 / 1.4401); Maximum cable length: 100 m; (IO-Link: max. 20 m)



IO-Link

1	L+
2	not to be used
3	L-
4	IO-Link
5	not to be used
6	not to be used
7	not to be used
8	not to be used
Screen	plug

encoder

1	UB
2	A
3	GND
4	Z/0-Pulse (90 deg)
5	B
6	A-
7	B-
8	Z-
Screen	plug

Preset counter

1	UB
2	IN1
3	GND
4	not to be used
5	OUT1
6	not to be used
7	not to be used
8	not to be used
Screen	plug

Speed monitor

1	UB
2	OUT2
3	GND
4	not to be used
5	OUT1
6	OUT2-
7	OUT1-
8	not to be used
Screen	plug

ROP524

Incremental encoder with hollow shaft and display

INCREMENTAL ENCODER PERFORMANCE LINE

Diagrams and graphs

Pulse diagram

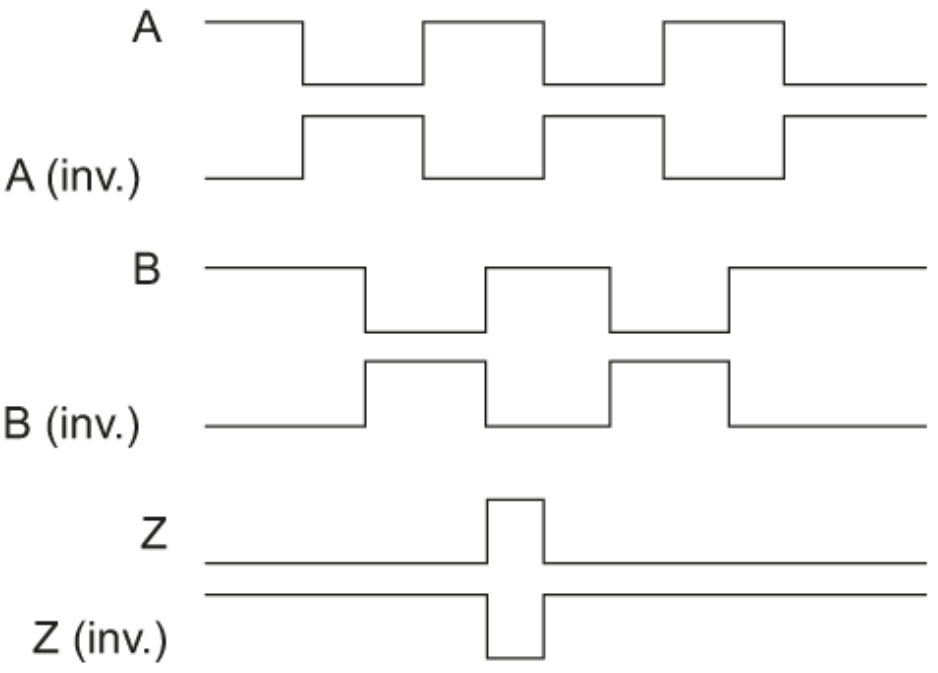

direction of rotation clockwise (looking at the shaft)