Bourdon tube pressure gauges, liquid filled,
Type 213.53.0XX
Item no.: 7116202

Description	
Design according	EN 837-1
Accuracy class	class 1.6
Scale range	0...10 bar
2nd Scale or Special Scale	2nd scale psi
Constructional design	
Process connection	G 1/4 B
Connector location	back mount
Pressure element	Copper alloy
Movement	Copper alloy
Case	Crimp ring case (version 53)
Nominal size	050 mm
Case filling fluid	glycerine
Pointer	plastic, black
Window	plastic, clear
Dial	plastic, white, with stop-pin
Options	
Mounting flange/bracket	narrow panel ring, SS,rolled on,with mounting bracket
Operating conditions	
Pressure limitation	Steady: 3/4 x full scale value Fluctuating: 2/3 x full scale value Short time: Full scale value
Permissible ambient temperature	-20 ... +60 °C
Permissible medium temperature	+60°C maximum
Temperature effect when the temperature deviates from the reference temperature (+20°C)	Max. +-0.4 %/10 K of the span
Ingress protection	IP 65

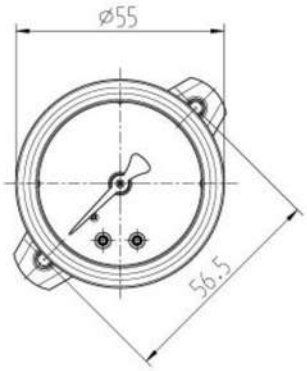

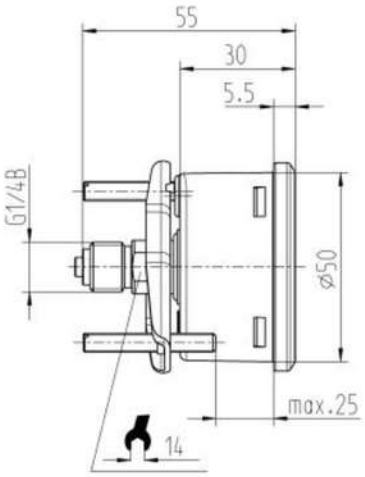

WIKA Instruments – 38 Avenue du Gros Chêne – 95220 HERBLAY
Phone0 820 95 10 10
info_fr@wika.com • http://www.wika.fr