# N7R23A

## Inductive NAMUR ring sensor

I7R2015-NL/1G/1D

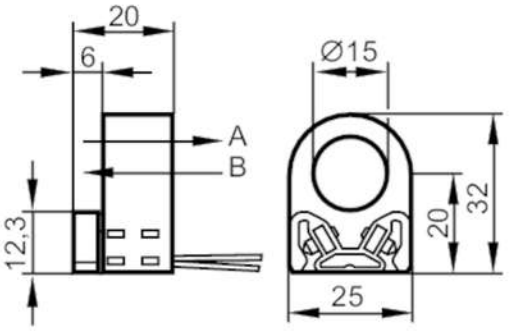


A direction of movement A
B direction of movement B

| | | |
|---|---|---|
| **Product characteristics** | | |
| Electrical design | | NAMUR |
| Output function | | normally closed |
| Housing | | circular |
| Dimensions | [mm] | 32 x 25 x 20 |
| **Application** | | |
| Operating principle | | bistable |
| **Electrical data** | | |
| Connection to switching amplifiers | | yes |
| Switching amplifiers | | connection to certified intrinsically safe circuits with the max. values: U = 15 V / I = 50 mA / P = 120 mW |
| Nominal voltage DC | [V] | 8.2; (1kΩ) |
| Current consumption | [mA] | value for direction of movement A : < 1,2; value for direction of movement B : > 2,1 |
| Protection class | | III |
| **Outputs** | | |
| Electrical design | | NAMUR |
| Output function | | normally closed |
| **Detection zone** | | |
| Measuring ball (diameter) | [mm] | 6 |
| Max. travel speed | [m/s] | 10 |
| **Accuracy / deviations** | | |
| Hysteresis | [mm] | 2 |
| **Operating conditions** | | |
| Ambient temperature | [°C] | -40...100 |
| Note on ambient temperature | | max. temperature span: 100 K |
| Protection | | IP 67 |
| **Tests / approvals** | | |
| Approval | | BVS 08 ATEX E026; IECEx BVS 09.0016 |
| ATEX marking | | II 1G Ex ia IIC T4 Ga |

# N7R23A

## Inductive NAMUR ring sensor

I7R2015-NL/1G/1D

| | | |
|---|---|---|
| | | II 1D Ex ia IIIC T125°C Da |
| EMC | | EN 60947-5-2 |
| MTTF | [years] | 1261 |
| **Safety classification** | | |
| Max. internal capacitance | [nF] | 90 |
| Max. internal inductance | [µH] | 65 |
| **Mechanical data** | | |
| Weight | [g] | 47.2 |
| Housing | | circular |
| Dimensions | [mm] | 32 x 25 x 20 |
| Inside diameter | [mm] | 15 |
| Materials | | PA 12-GF30 |
| **Remarks** | | |
| Pack quantity | | 1 pcs. |
| **Electrical connection** | | |

Cable: 0.15 m; 2 x 0.14 mm², PTFE

Connection

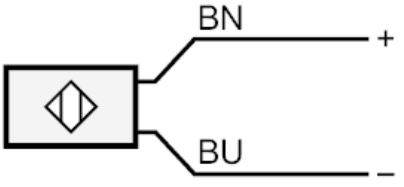


| | |
|---|---|
| | Core colours : |
| BN = | brown |
| BU = | blue |