

Model Number

GLV30-8-2000-2372

Diffuse mode sensor
connector M12 x 1, 4-pin

Features

- M30 plastic housing
- Dark-On switching

Dimensions

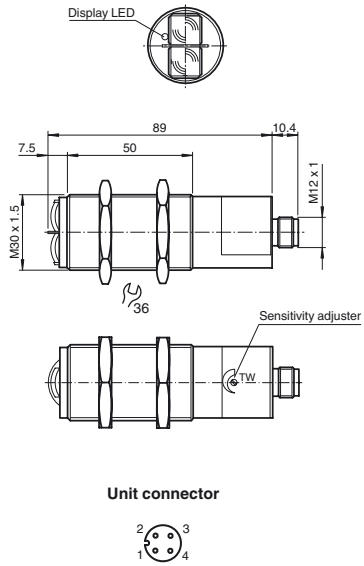

Unit connector

Electrical connection

Option:

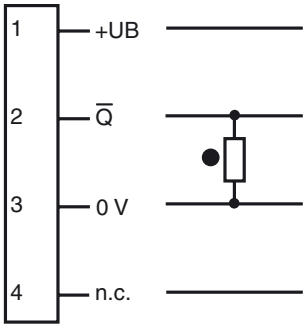

○ = Light on
● = Dark on

Pinout

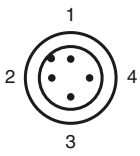

Release date: 2012-04-10 14:37 Date of issue: 2012-04-10 419126_eng.xml

Subject to modifications without notice
Copyright Pepperl+Fuchs

Technical data

General specifications		
Detection range		100 ... 2500 mm
Adjustment range		500 ... 2500 mm
Light source		IRED
Light type		modulated infrared light
Approvals		CE
Diameter of the light spot		approx. 450 mm at a distance of 2000 mm
Angle of divergence		± 7 °
Ambient light limit		30000 Lux
Indicators/operating means		
Function display		LED yellow, lights up if receiver is not lit
Controls		Detection range adjuster
Electrical specifications		
Operating voltage	U_B	24 V DC ± 20 %
Ripple		10 %
No-load supply current	I_0	30 mA
Output		
Switching type		dark on
Signal output		1 PNP, short-circuit protected, reverse polarity protected, open collector
Switching voltage		max. 30 V DC
Switching current		max. 200 mA
Switching frequency	f	35 Hz
Response time		10 ms
Standard conformity		
Standards		EN 60947-5-2
Ambient conditions		
Ambient temperature		-20 ... 60 °C (-4 ... 140 °F)
Storage temperature		-20 ... 75 °C (-4 ... 167 °F)
Mechanical specifications		
Protection degree		IP67
Connection		Plastic connector M12 x 1, 4-pin
Material		
Housing		ABS
Optical face		plastic lenses
Mass		approx. 70 g

Approvals and certificates	
CCC approval	Products with a maximum operating voltage of ≤36 V do not bear a CCC marking because they do not require approval.

Curves/Diagrams

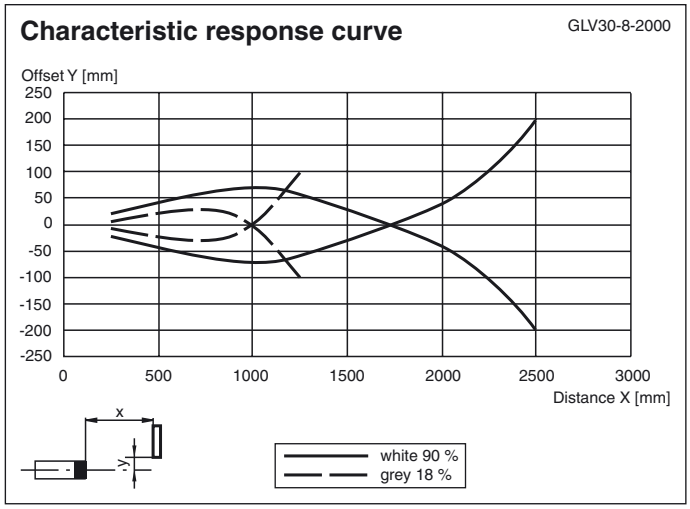

Accessories

V1-G-2M-PUR
Cable socket, M12, 4-pin, PUR cable

V1-W-2M-PUR
Cable socket, M12, 4-pin, PUR cable

BF 30
Mounting flange, 30 mm

BF 30-F
Mounting flange with dead stop, 30 mm

Other suitable accessories can be found at www.pepperl-fuchs.com

Release date: 2012-04-10 14:37 Date of issue: 2012-04-10 419126_eng.xml

Subject to modifications without notice
Copyright Pepperl+Fuchs
Pepperl+Fuchs Group www.pepperl-fuchs.com
USA: +1 330 486 0001 fa-info@us.pepperl-fuchs.com
Germany: +49 621 776-4411 fa-info@pepperl-fuchs.com
Singapore: +65 6779 9091 fa-info@sg.pepperl-fuchs.com
PEPPERL+FUCHS SENSING YOUR NEEDS

Detection ranges

GLV30-8-2000

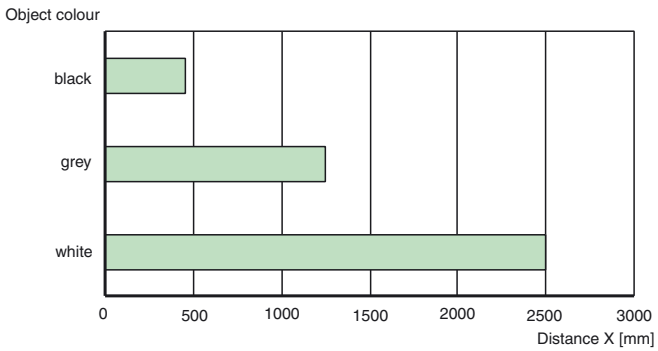

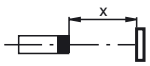

Release date: 2012-04-10 14:37 Date of issue: 2012-04-10 419126_eng.xml