MINIATURE ROCKER SWITCH

SR Series

Features

- 10 or 20 amp switching in a miniature package
- Single-throw and double-throw options
- Choice of actuator and housing color
- Variety of terminals available
- Industry-standard mounting dimensions
- Mechanical life: min. 100,000 operations

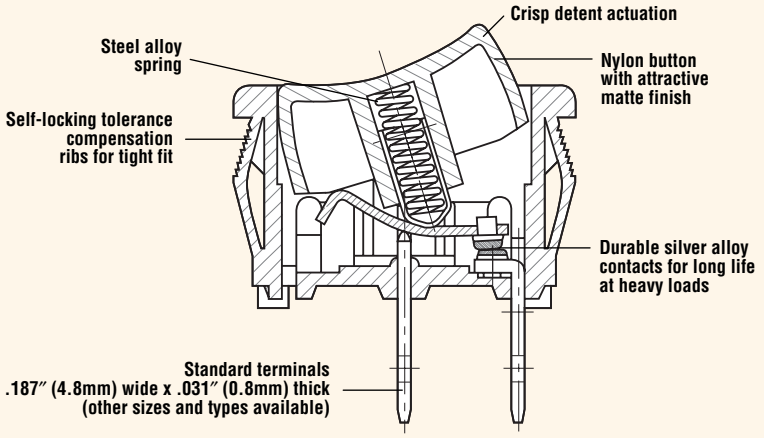

Electrical Ratings

Switch Series	EN61058 Rating	UL1054 Rating	Electrical Life at Rated Load According to VDE (Min. Operations)	Electrical Life at Rated Load According to UL (Min. Operations)
SR	10(4)A, 250V~, µT85	10A, 125VAC; 6A, 250VAC	10,000	6,000

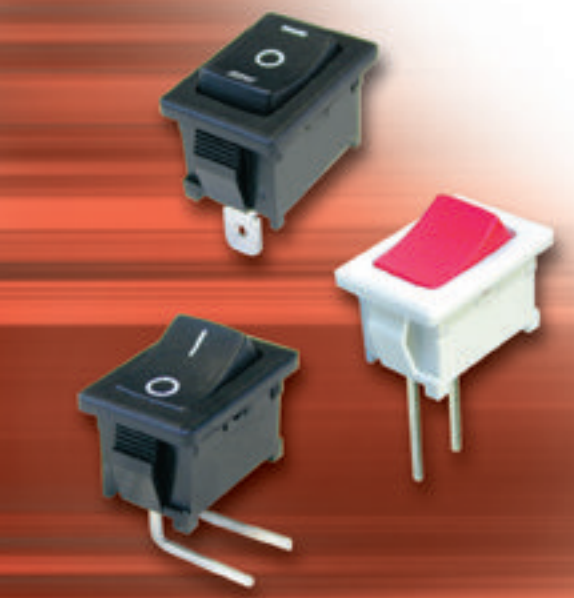

Specifications

Electrical	
Dielectric Strength:	1000VAC for 1 minute
Insulation Resistance:	10^8 ohms min at 500VDC
Initial Contact Resistance:	0.020 ohms max
Temperature Range:	-20°C to +65°C

Materials	
Actuator:	Nylon 66 94V-2
Case:	Nylon 66 94V-2
Spring:	Steel Wire
Contacts:	Silver or Copper Alloy
Movable Arm:	Silver-Plated Copper Alloy
Terminals:	Tin-Plated Copper Alloy

Dimensions inches (mm)

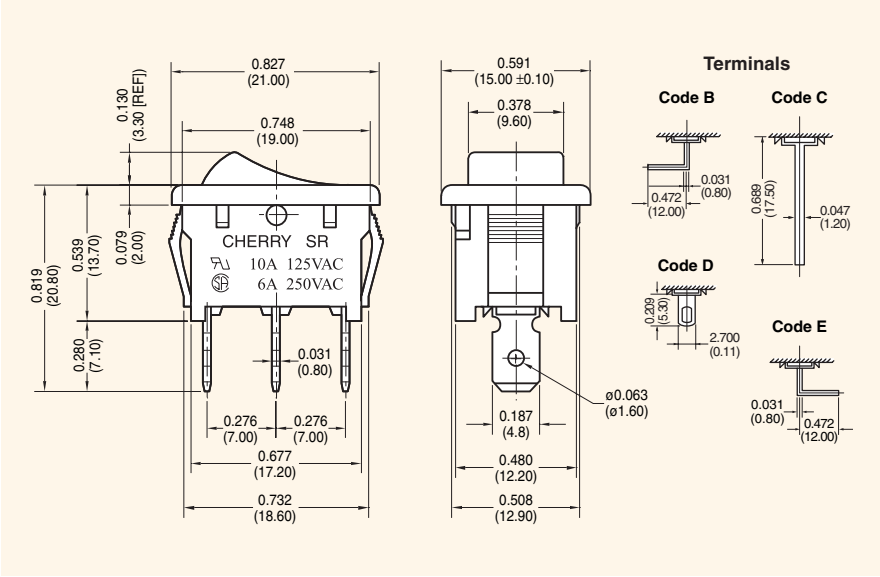

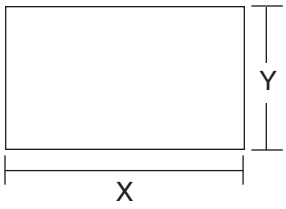

Z = Panel Thickness

Recommended Panel Cut-Out Dimensions

inches (mm)

Dim. Z	Dim. X	Dim. Y
0.030 to 0.049 (0.75 to 1.25)	0.752 (19.10)	0.508 (12.90)
0.049 to 0.079 (1.25 to 2.00)	0.760 (19.30)	0.508 (12.90)
0.079 to 0.118 (2.00 to 3.00)	0.775 (19.76)	0.508 (12.90)

Examples of Common Part Numbers and Descriptions inches (mm)

Part Number	Circuitry	Switch Function	Terminal Type	Actuator/ Housing Color	Legend Marking
SRB22A2FBBNN		On – Off	0.187 (4.8) Quick-Connect	Black/Black	
SRB22A2BBBNN		On – Off	0.187 (4.8) Quick-Connect	Black/Black	
SRB22A2DBBNN		On – Off	0.187 (4.8) Quick-Connect	Black/Black	OFF ON
SRB23A2BBBNN		On – On	0.187 (4.8) Quick-Connect	Black/Black	
SRB24A2HBBNN		On – Off – On	0.187 (4.8) Quick-Connect	Black/Black	I O II

Boot #0015-0644

Ordering Information

SR **B** **2** **4** **A** **2** **H** **B** **B** **N** **N**

Series

Code	Contact Rating
B	10A, 125VAC 6A, 250VAC (UL, CSA) 10(4)A, 250V~, µT85 (VDE)
J	20A, 125VAC (UL, cUL)

Code	Circuitry
2	Single-Pole

Code	Switch Function
2	On – Off
3	On – On
4	On – Off – On
5	(On) – Off

Code	Terminal Type inches (mm)
A	0.187 (4.8) QC
B	PC Thru-Hole Left Angle
C	PC Thru-Hole Straight
E	PC Thru-Hole Right Angle
P	0.346 x 0.189 (8.79 x 4.80) Solder Tag

Code	Actuator Type
2	Curve

Code	Actuator Marking
B	Blank
C	LO HI
D	OFF ON
E	O I
F	O —
G	•
H	I O II

Code	Housing Color
B	Black
W	White
Y	Grey
C	Brown

Code	Actuator Color
B	Black
R	Red
W	White
Y	Grey
C	Brown

Code	Lighted
N	Non-Lighted

Code	Splashproof
N	No Rocker Boot
S	Waterproof Boot