CFVCSHP - VoCALL type A outstation



The VoCALL Type A outstation is a compact unit which offers easy access via a magnetic push catch door.

The Type A outstation is compatible with all VoCALL systems for use as a standard fire telephone or disabled refuge call point.

Features and benefits

- Compact design
- High volume ringer
- Status LED
- Telecoil for hearing impaired users
- Full duplex operation
- Stainless steel option
- Versatility, the unit can be used on all VoCALL systems
- Dual use, the Type A outstation can be used as a fire telephone or a disabled refuge call point
- Magnetic push catch, for quick and easy access

Powering Business Worldwide

Technical specification

Code	CFVCSHP
Product description	VoCALL Type A outstation
Outstation cables	
Type	Enhanced
Cores	2 core 1mm or 1.5mm
Distance	500m
Physical	
Construction	Zintec, Powder Coated
Colour options	Red / Stainless Steel
Weight	1.4kg (IP65 lockable box 2.5kg)
Installation	
Mounting	Surface or flush
Mounting height	1200mm from the finished floor level to the centre point of the unit.
Cutout	325mm x157mm (flush mount units)
Clearance	When units are used as refuge call points suitable space for a wheelchair user must be allowed.

Unit mounting

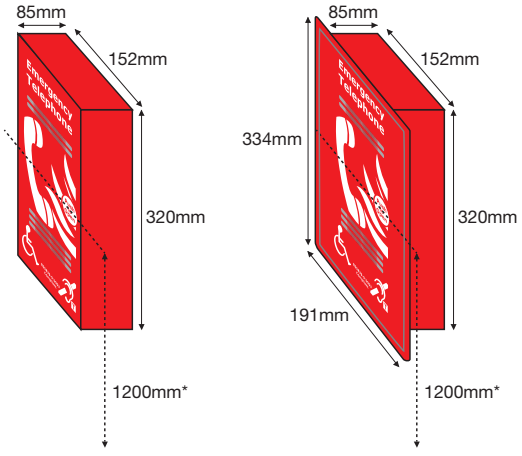

Dimensions

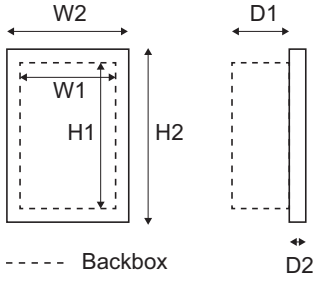

Description	H1 (mm)	W1 (mm)	D1 (mm)	D2 (mm)
Backbox	320	152	85	-

Description	H2 (mm)	W2 (mm)	D1 (mm)	D2 (mm)
Flush Mounted	334	191	85	2

Unit wiring

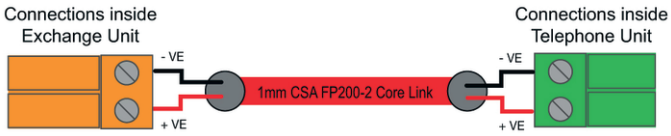

Line - Connector on Network / Compact Unit to Black Phone Lead
Line + Connector on Network / Compact Unit to Yellow Phone Lead

Type A Outstations are defined in BS5839 Pt9 and can be used as a fire telephone or disabled refuge call point.
When choosing the outstation type for use with an EVC System we recommend reading section 11 of BS5839 Pt9:2011.

11.1.a
Type A Outstations should be used for evacuation or fire fighting use and a Type B Outstation should only be used where Type A Outstations are impractical.

11.1.b
For disabled refuges Type A or Type B Outstations can be used, however in locations (section 11.6.k) Type B Outstations can only be used where the background noise is below 40dBA (therefore there can be no sounder or voice alarm coverage in the area).

All VoCALL Outstations are designed for use by multi-disability users, having high contrast signage in line with RNIB guidelines and an induction loop coil (to BSEN60118-4) in the outstation.

It is recommend that Type A Outstations are used in most locations, otherwise you may have to consider acoustic hoods or 2 outstations in each location for compliance with the other associated standards and laws, including BS8300 and the Equality Act 2010.

Catalogue numbers

Description	Code
VoCALL Type A outstation, surface mount, red	CFVCSHP
VoCALL Type A outstation, surface mount, stainless steel	CFVCSHPSS
VoCALL Type A outstation, flush mount, red	CFVCFHP
VoCALL Type A outstation, flush mount, stainless steel	CFVCFHPSS
VoCALL Type A uncased red handset	CFVCHFS
VoCALL Type A outstation, IP65 lockable, surface mount, red	CFVCIPA