Double-Ended Cordsets

BCC M415-M414-3A-304-VX8434-020
Order Code: BCC03CF

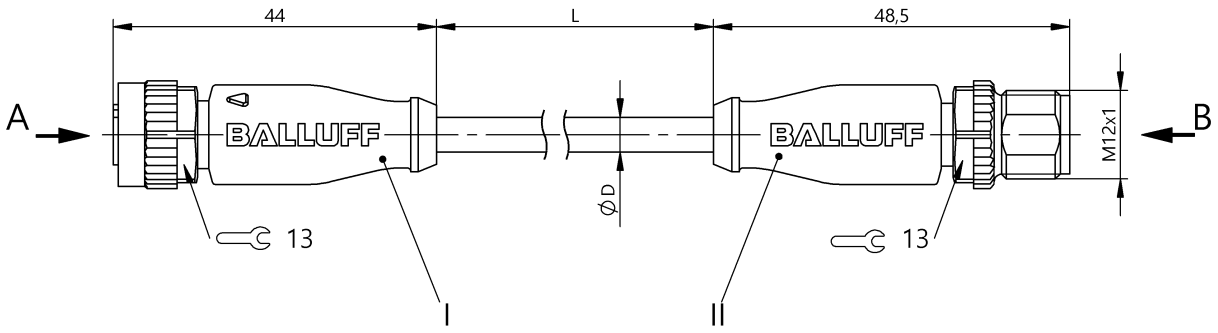

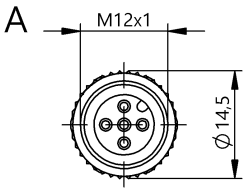

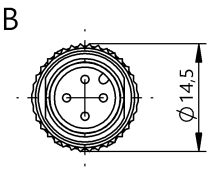

Basic features

Approval/Conformity	CE cULus EAC WEEE

Electrical connection

Bending radius min., fixed cable	5 x D
Bending radius min., flexible cable	10 x D
Cable	PVC gray, 2 m, drag chain compatible
Cable diameter D	4.80 mm ±0.15 mm
Cable, bending cycles min.	2 mil.
Conductor cross-section	0.34 mm²
Connection 1	M12x1-Female, Straight, 5-pin, A-coded
Connection 2	M12x1-Male, Straight, 4-pin, A-coded
Number of conductors	4
System	Molded/Molded

Electrical data

Operating voltage Ub	250 VDC / 250 VAC
Rated current (40 °C)	4.0 A

Environmental conditions

Cable temperature UL max., fixed routing	80 °C
Cable temperature UL max., flexible routing	80 °C
Cable temperature, drag chain	-5...60 °C
Cable temperature, fixed routing	-40...105 °C
Cable temperature, flexible routing	5...105 °C
IP rating	IP67, IP68, IP69K/IP67, IP68, IP69K

Interface

Switching output	Complementary

Material

Cable jacket, material	PVC
Material contact carrier	PUR/PUR
Material contacts	Bronze/Brass
Material cover nut	Die-cast zinc/Die-cast zinc
Material grip	PUR/PUR

Mechanical data

Acceleration max., drag chain	5 m/s²
Cable jacket, color	gray
Cable length L	2.00 m
Cable properties	drag chain compatible
Horizontal travel permitted, drag chain	5 m
Tightening torque pigtail	0.6 Nm/0.6 Nm
Traverse speed max., drag chain	200 m/min
Vertical travel permitted, drag chain	2 m

BCC M415-M414-3A-304-VX8434-020
Order Code: BCC03CF

Remarks

Cable construction acc. to UL-AWM Style 2517
Silicone-free
Flame-retarding acc. to IEC 60332-2
Enclosure rating per IEC 60529 or 20653, only in screwed state with the associated mating piece.

Connector Drawings

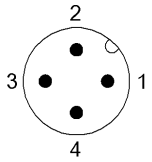

II

PIN 1: brown
PIN 2: white
PIN 3: blue
PIN 4: black

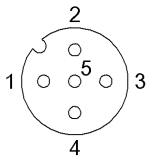

I

PIN 1: brown
PIN 2: white
PIN 3: blue
PIN 4: black
PIN 5: n.c.

Wiring Diagrams

