Brand of NTN corporation

Technical data



6205EEC3

Single row deep groove ball bearings

Deep groove ball bearing, radial contact, pressed steel cage, contact seals on both sides

VISUAL (S)

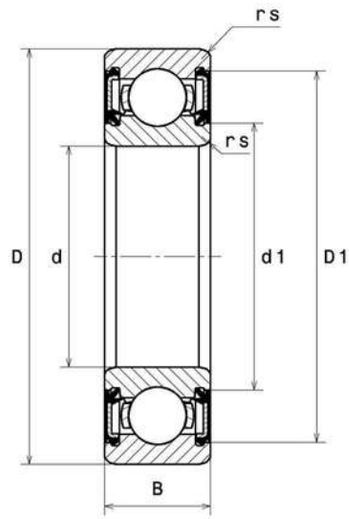

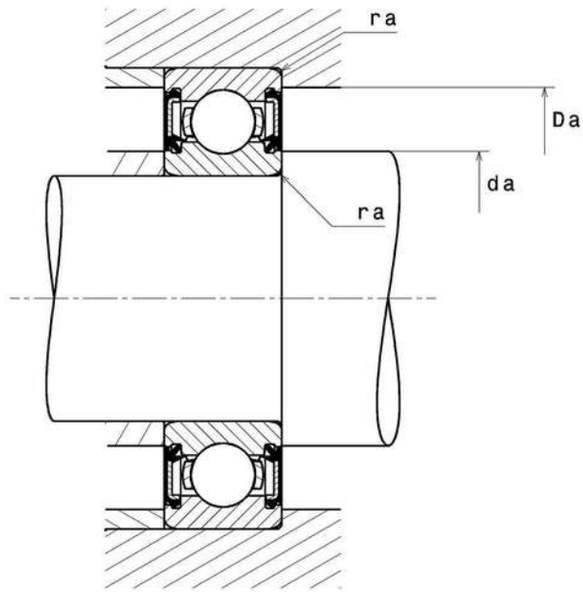

NTN Europe
1 rue des Usines · BP 2017 · 74010 Annecy Cedex · France · Tel. +33 (0)4 50 65 30 00
S.A. au capital de 322 639 919 € · RCS ANNECY B 325 821 072 · Id. Fiscale : FR 48 325 821 072
SIRET 325 821 072 00015 · Code APE 2815 Z · Code NACE 28.15

6205EEC3
Single row deep groove ball bearings

PRODUCT DEFINITION	
Brand	SNR
d - Internal diameter	25 mm
D - External diameter	52 mm
B - Bearing/Inner ring width	15 mm
d1 - External diameter inner ring	31,8 mm
D1 - Inner diameter outer ring	46,4 mm
rs - Min fillet radius	1 mm
Radial clearance class	C3
Mass	0,129 kg

PRODUCT PERFORMANCE	
C - Dynamic load	14,8 kN
C0 - Static load	7,9 kN
Cu - Fatigue limit load	0,36 kN
f0 - Coefficient	13.9
Nlim - Mechanical Limit Speed	9100 tr/min
Tmin - Min operating temperature	-30 °C
Tmax - Max operating temperature	120 °C

BEARING FREQUENCIES	
BPFO - Characteristic outer ring frequency (60 rpm)	3.584 Hz
BPFI - Characteristic inner ring frequency (60 rpm)	5.416 Hz
FTF - Characteristic cage frequency (60 rpm)	0.398 Hz
BSF - Characteristic rolling element frequency (60 rpm)	4.71 Hz

6205EEC3
Single row deep groove ball bearings

ABUTMENT	
da min - Min shoulder diameter IR	30 mm
da max - Max shoulder diameter IR	25,9 mm
Da max - Max shoulder diameter OR	47 mm
ra max - Max shaft & housing fillet radius	1 mm

INDUSTRY CALCUL FACTORS

Equivalent dynamic radial load

P = X.Fr + Y.Fa

$\frac{f_0 F_a}{C_0}$	e	Fa / Fr ≤ e		Fa / Fr > e	
		X	Y	X	Y
0.172	0.19	1	0	0.56	2.3
0.345	0.22				1.99
0.689	0.26				1.71
1.03	0.28				1.55
1.38	0.3				1.45
2.07	0.34				1.31
3.45	0.38				1.15
5.17	0.42				1.04
6.89	0.44				1

Equivalent static radial load

Po = Xo.Fr + Yo.Fa

X_0	Y_0
0.6	0.5

For single or DT bearing arrangement :

If Po <Fr, then use Po = Fr