E12529

Y-splitter

ZDO2H050ZDS0000-00STGH050ZDS

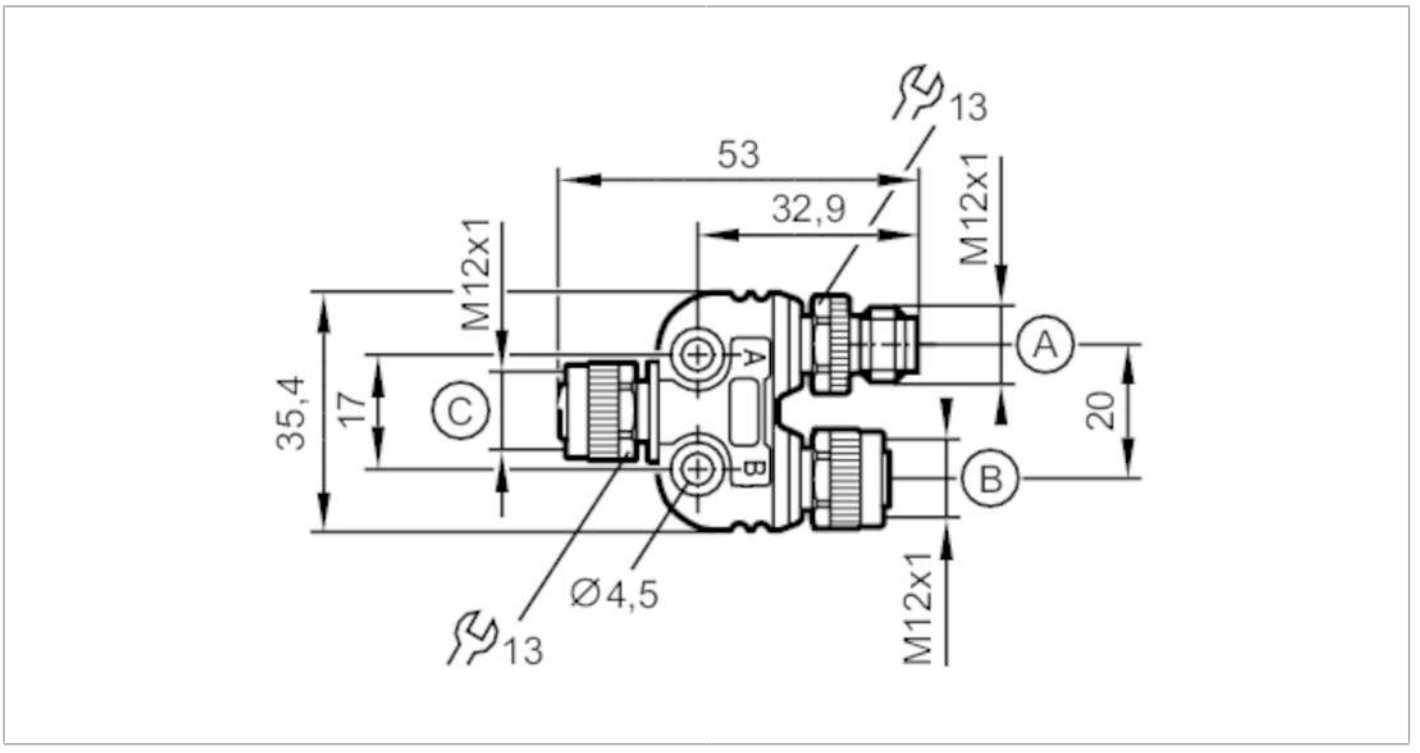

Application		
Special feature		Free from silicone; Gold-plated contacts
Free from silicone		yes
Electrical data		
Operating voltage	[V]	60 AC/DC
Protection class		II
Max. current load total	[A]	4
Operating conditions		
Ambient temperature	[°C]	-25...85
Protection		IP 68
Mechanical data		
Weight	[g]	37.1
Materials		PUR black
Moulded-body material		PUR, Halogen-free
Remarks		
Pack quantity		1 pcs.

E12529

Y-splitter

ZDO2H050ZDS0000-00STGH050ZDS

Electrical connection - plug

Connector: 1 x M12; coding: A; Moulded body: PUR, Halogen-free; Contacts: gold-plated

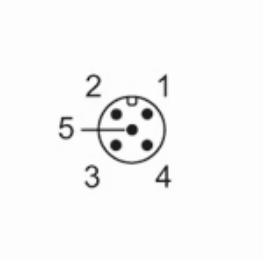

Electrical connection - socket

Connector: 2 x M12; coding: A; Moulded body: PUR, Halogen-free; Contacts: gold-plated

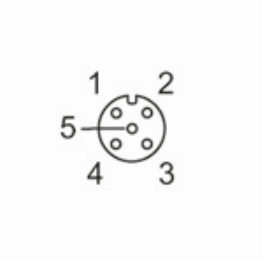

Connection

