E20861

Mounting set

Ø 12.2 mm

Clamp mounting

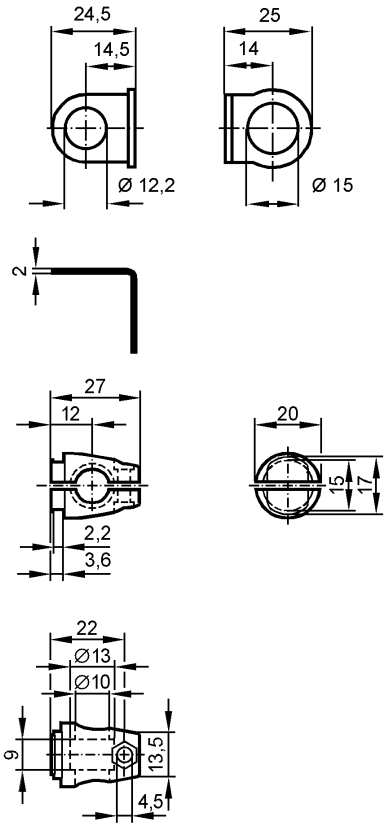

Made in Germany

Design		for types OF, IF
Type of mounting		free-standing M8
Housing materials		fixture: stainless steel 316Ti / 1.4571; clamp: stainless steel (316C)
Weight	[kg]	0.085
Accessories (included)		screw, M8 x 40