Druck
a Baker Hughes business

PV 62X / PV 62X-IS

Pneumatic/Hydraulic Pressure Stations

Instruction Manual



Druck.com

Introduction

There are three pressure stations in the PV 62XG / PV 62X-IS series. Two pneumatic pressure stations to give you accurate and controlled pressure and vacuum conditions, PV 621 and PV 622. One hydraulic pressure station to give you accurate and controlled hydraulic pressure conditions, PV 623.

To give the connected equipment overpressure protection, there are pressure relief valves (PRV) available for all the pressure stations. Refer to Chapter 6.

When used with a DPI 620G / DPI 620G-IS multi-function calibrator, HART® / FOUNDATION™ Fieldbus / Profibus® communicator, together with a PM 620 / PM 620-IS / PM 620T / PM 620T-IS pressure module, the following functions are available.

- Measure pressure / Leak test.
- *Documenting software.
- *HART® (Highway Addressable Remote Transducer) communications software to set up and calibrate devices that use the HART® field communications protocol.
- *Foundation Fieldbus™ communicator.

ATEX, IECEx and ETL approved intrinsically safe versions are available for use in hazardous areas.

Summary of Functions

This list gives a summary of the available pressure station functions:

- “Quick fit” pressure adaptors for easy connection to the equipment under test.
- Volume adjuster to give accurate control of applied pressure.
- Pressure connection for a PM 620 / PM 620-IS / PM 620T / PM 620T-IS pressure module.
- Latch mechanism to connect the DPI 620G / DPI 620G-IS calibrator to make a fully integrated pressure calibrator instrument.
- Optional pressure relief valves (PRV) to give overpressure protection.

Pneumatic Pressure Stations

The following list are functions available with the PV 621G / PV 622G / PV 621-IS / PV 622-IS:

- Selector switch to change the pump operation from pressure generator to vacuum generator.
- Needle point pressure release valve to control the release of pressure.

Hydraulic Pressure Station

The following list are functions available with the PV 623G / PV 623-IS:

- Internal hydraulic reservoir: 100 cm^3 (6.1 in^3)
- Self sealing pressure module connection to prevent fluid leaks.
- Fast thermal stability for devices connected directly to the test port connection, less than one minute.

* Optional extra.

Copyright 2022 Baker Hughes Company.

Pressure Ranges

Model	Pressure Range
PV 621G / PV 621-IS: Pneumatic pressure station	-950 mbar to 20 bar (-13.5 to 300 psi)
PV 622G / PV 622-IS: Pneumatic pressure station	-950 mbar to 100 bar (-13.5 to 1500 psi)
PV 623G / PV 623-IS: Hydraulic pressure station	0 to 1000 bar (0 to 15,000 psi)

Safety

Before you use the pressure station, make sure that you read and understand all the related data. This includes: the applicable local safety procedures, this publication, and the instructions for the accessories, options and equipment you are using it with. Read more safety conditions in the 132M9252 safety guide.

Copyright 2022 Baker Hughes Company.

Contents

1. Instrument Parts, Accessories and Options 1
   - 1.1 Introduction 1
   - 1.2 Controls 1

2. Connect / Disconnect the Equipment Under Test 2
   - 2.1 Introduction 2
   - 2.2 Procedure 3
     - 2.2.1 Connect 3
     - 2.2.2 Disconnect 3

3. Pneumatic Pressure Operation (PV 621G / PV 621-IS) 3
   - 3.1 Introduction 3
   - 3.2 Release the Pressure 4
   - 3.3 Operation 4
     - 3.3.1 Vacuum Procedure 4
     - 3.3.2 Pressure Procedure 4

4. Pneumatic Pressure Operation (PV 622G / PV 622-IS) 5
   - 4.1 Introduction 5
   - 4.2 Release the Pressure 5
   - 4.3 Operation 5
     - 4.3.1 Vacuum Procedure 5
     - 4.3.2 Pressure Procedure 6

5. Hydraulic Pressure Operation (PV 623G / PV 623-IS) 6
   - 5.1 Introduction 6
   - 5.2 Release the Pressure 7
   - 5.3 Filling and Priming 7
     - 5.3.1 Models without Priming Pump 7
     - 5.3.2 Models with Priming Pump 8
   - 5.4 Operation 8
     - 5.4.1 Pressure Procedure 9
   - 5.5 Add More Hydraulic Fluid 9
   - 5.6 Drain Hydraulic Fluid from Equipment Under Test 10
     - 5.6.1 Preparation 10
     - 5.6.2 Procedure 10
   - 5.7 Drain Hydraulic Fluid from PV 623G / PV 623-IS 10
     - 5.7.1 Preparation 10
     - 5.7.2 Procedure 11

6. Pressure Relief Valve (PRV) 11
   - 6.1 Introduction 11
   - 6.2 Installation 12
   - 6.3 Adjustment Procedure 12

Copyright 2022 Baker Hughes Company.

7. Maintenance 12
7.1 Introduction 12
7.2 Repair 12
7.3 Cleaning 13
7.4 Draining the Unit (PV 623G / PV 623-IS Models) 13
7.5 Leak Test 13
7.5.1 Preparation 13
7.5.2 Procedure 13
7.6 Return Goods/Material Procedure 14

8. Specification 14

Copyright 2022 Baker Hughes Company.

1. Instrument Parts, Accessories and Options

1.1 Introduction

This chapter gives a description of the different parts of each pressure station.

1.2 Controls

PV 621G
PV 621-IS

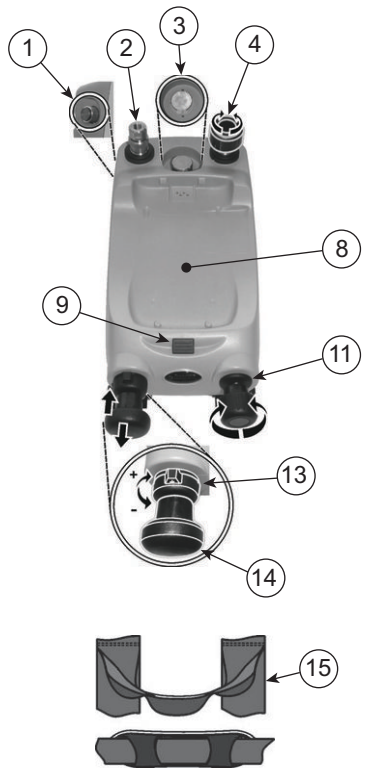

PV 622G
PV 622-IS



PV 623G
PV 623-IS

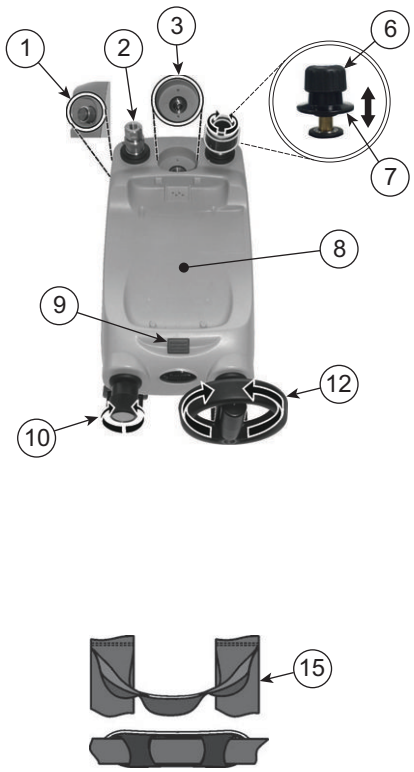

1. Pressure connection for a pressure relief valve (PRV). This is an optional accessory. A blanking plug is fitted as standard. A PRV provides overpressure protection for the equipment under test and the PM 620 / PM 620-IS / PM 620T / PM 620T-IS module (3). See Table 3 on page 16 for the range of available Druck PRVs.
2. Test port: Pressure connection to connect the equipment under test. The test port uses “Quick fit” pressure adaptors. These are easy to remove, change and install. Refer to Chapter 2.
3. Pressure and electrical connections for a PM 620 / PM 620-IS / PM 620T / PM 620T-IS module. If a PM 620 / PM 620-IS / PM 620T / PM 620T-IS is not fitted, use Druck blanking plug (IO620-BLANK).
4. Pneumatic pressure release valve. Use to release all pressure in the system. This is a needle point valve. The valve allows fine control for a slow controlled release of pressure.
5. Pneumatic refill valve. Close the valve to seal off all pressure and refill the pressure mechanism. Open the refill valve to use the volume adjuster (12) to increase or decrease the pressure.
6. Hydraulic pressure release valve. Use to release all pressure in the system. Unscrew the valve fully to access the hydraulic fluid reservoir.
7. Hydraulic priming pump. Refer to Section 5.3 for filling and priming instructions.

Copyright 2022 Baker Hughes Company.

8. Moulded compartment for the DPI 620G / DPI 620-IS calibrator. It has electrical connections and a mechanical latch to hold the calibrator in position.
9. Push-button mechanism to release the DPI 620G / DPI 620-IS calibrator.
10. Hydraulic refill valve. Close the refill valve to seal off all pressure and refill the pressure mechanism with fluid. Open the refill valve to use the volume adjuster (12) to increase or decrease the pressure.
11. Volume adjuster. This control increases or decreases the pressure / vacuum. When the necessary pressure or vacuum has been set using the pump (14), use the volume adjuster to make fine adjustments.
12. Volume adjuster wheel with fold-in handle. The refill valve (5) or (10) sets the operation of the volume adjuster wheel: Full control or refill.
    i. Full control: Open the refill valve (5) or (10) to have full control to increase or decrease the pressure. Turn the volume adjuster clockwise to increase the pressure. Turn the volume adjuster counter-clockwise to decrease the pressure.
    ii. Refill: Close the refill valve (5) or (10) to refill the pressure mechanism. Turn the volume adjuster fully counter-clockwise. Then turn the volume adjuster clockwise to refill the pressure mechanism.

    Note: At high pressures, it is easier to turn the wheel with the handle folded in.
13. Pressure / vacuum selector to set the pump operation: (+) pressure, (-) vacuum. Release all pressure in the system before turning the pressure / vacuum selector. Sudden changes in pressure can damage the pump mechanism.
14. Pump mechanism. Use the pump mechanism to create the necessary pressure or vacuum. The volume adjuster (11) or (12) can be used to make fine adjustments.
15. Carrying strap with a carry handle and a shoulder strap.

2. Connect / Disconnect the Equipment Under Test



WARNING Pressurized gases and fluids are dangerous. Before you connect or disconnect pressure equipment, safely release all pressure.



CAUTION To prevent damage to the pressure station, do not let dirt get into the pressure mechanism. Before you connect equipment, make sure it is clean.

2.1 Introduction

The test port uses “Quick fit” pressure adaptors. These are easy to remove, change and install. The “Quick fit” adaptors are available in NPT and BSP (parallel) thread types. Adaptors for other thread types are available from Druck.

Copyright 2022 Baker Hughes Company.

2.2 Procedure

2.2.1 Connect

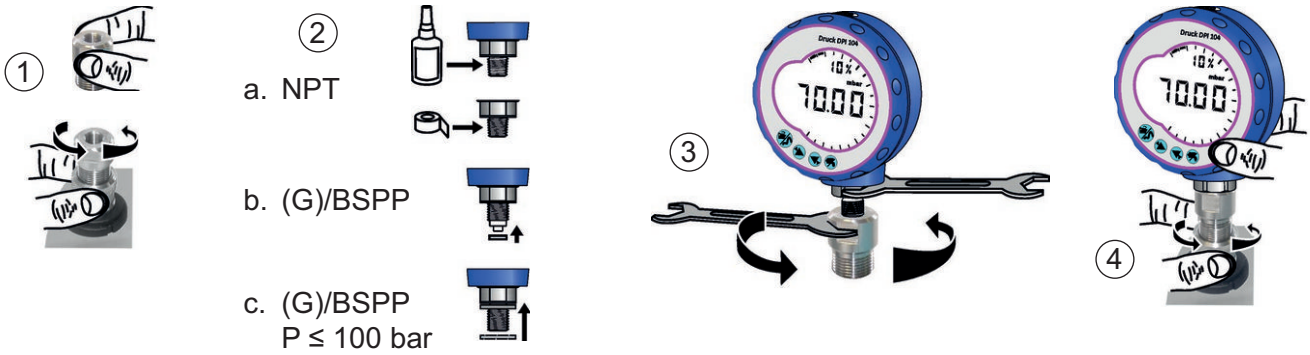

Follow the procedure below to connect the equipment under test to the pressure station test port.

1. Disconnect the “Quick fit” adaptor.
2. Use an applicable seal for the pressure connection:
   a. NPT type: Use an applicable sealant on the thread.
   b. BSP (parallel) type: A bonded seal at the bottom is recommended.
   c. BSP (parallel) type, 100 bar (1500 psi) or less: A bonded seal at the top is permitted.
3. Connect the “Quick fit” adaptor to the equipment under test and tighten to the applicable torque.
4. Connect the “Quick fit” adaptor to the test port and tighten it until it is hand-tight only.

2.2.2 Disconnect

Follow the procedure below to disconnect the equipment under test from the pressure station test port.

1. Safely release all pressure in the system:
   - See Section 3.2 for PV 621G / PV 621-IS.
   - See Section 4.2 for PV 622G / PV 622-IS.
   - See Section 5.2 for PV 623G / PV 623-IS.
2. Disconnect the “Quick fit” adaptor from the pressure station test port. The “Quick fit” adaptor should only be hand-tight.
3. Disconnect the “Quick fit” adaptor from the equipment under test.

3. Pneumatic Pressure Operation (PV 621G / PV 621-IS)

3.1 Introduction

This chapter gives instructions on how to operate the PV 621G / PV 621-IS pressure station to supply the necessary pressure or vacuum.

Before you start:

- Read and understand “Safety” on page ii.
- Make sure that there is no damage to the pressure station.
- Make sure that there are no missing items.

  Note: Use only original parts supplied by the manufacturer.

Refer to Chapter 1 for a description of the pressure station controls.

Copyright 2022 Baker Hughes Company.

3.2 Release the Pressure

To release all pressure in the system:



1. Open the pressure release valve counter-clockwise (1 turn).

3.3 Operation

1. If applicable, install a pressure relief valve, see Chapter 6.
2. Connect the equipment under test to the PV 621G / PV 621-IS test port, see Chapter 2.
3. Use the following steps to set the necessary vacuum or pressure.

3.3.1 Vacuum Procedure



1. Set the pressure / vacuum selector to vacuum (-); fully counter-clockwise.
2. To do equal adjustments (up or down) at the end of the procedure, turn the volume adjuster to the middle of its range of operation.

   Note: To get the maximum vacuum, turn the volume adjuster fully clockwise.
3. Close the pressure release valve clockwise.
4. Use the pump to set the maximum vacuum or set the approximate vacuum to be adjusted.
5. Use the volume adjuster to adjust the vacuum: (+) decrease; (-) increase.

3.3.2 Pressure Procedure

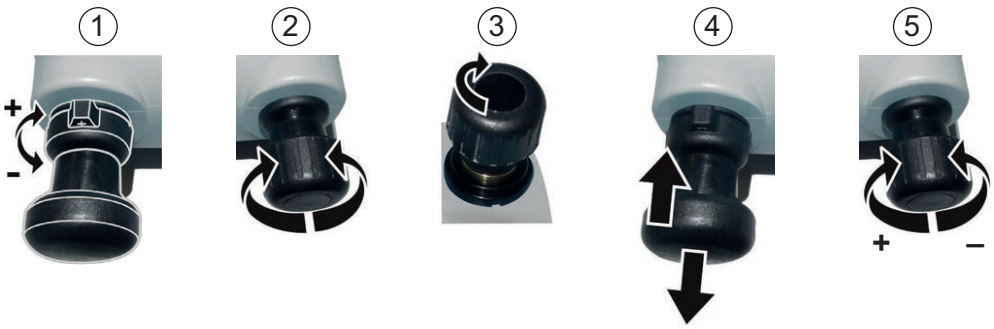

1. Set the pressure / vacuum selector to pressure (+); fully clockwise.
2. To do equal adjustments (up or down) at the end of the procedure, turn the volume adjuster to the middle of its range of operation.
3. Close the pressure release valve clockwise.

Copyright 2022 Baker Hughes Company.

4. Use the pump to set the approximate pressure.
5. Use the volume adjuster to adjust the pressure: (+) decrease; (-) increase.

4. Pneumatic Pressure Operation (PV 622G / PV 622-IS)

4.1 Introduction

This chapter gives instructions on how to operate the PV 622G / PV 622-IS pressure station to supply the necessary pressure or vacuum.

Before you start:

- Read and understand “Safety” on page ii.
- Make sure that there is no damage to the pressure station.
- Make sure that there are no missing items.

  Note: Use only original parts supplied by the manufacturer.

Refer to Chapter 1 for a description of the pressure station controls.

4.2 Release the Pressure

To release all pressure in the system:

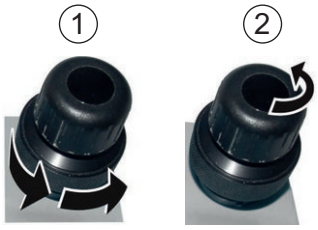

1. Open the refill valve counter-clockwise (1 turn).
2. Open the pressure release valve counter-clockwise (1 turn).

4.3 Operation

1. If applicable, install a pressure relief valve, see Chapter 6.
2. Connect the equipment under test to the PV 622G / PV 622-IS test port, see Chapter 2.
3. Use the following steps to set the necessary vacuum or pressure.

4.3.1 Vacuum Procedure



1. Set the pressure / vacuum selector to vacuum (-); fully counter-clockwise.
2. Open the refill valve counter-clockwise (1 turn).
3. To do equal adjustments (up or down) at the end of the procedure, turn the volume adjuster to the middle of its range of operation.

   Note: To get the maximum vacuum, turn the volume adjuster fully clockwise.
4. Close the pressure release valve clockwise.

Copyright 2022 Baker Hughes Company.

5. Use the pump to set the approximate pressure.
6. Use the volume adjuster to adjust the vacuum: (+) decrease; (-) increase.

4.3.2 Pressure Procedure



1. Set the pressure / vacuum selector to pressure (+); fully clockwise.
2. To do equal adjustments (up or down) at the end of the procedure, turn the volume adjuster to the middle of its range of operation.
3. Close the refill valve clockwise.
4. Use the pump to set a pressure up to ≈ 20 bar (300 psi).
5. Open the refill valve counter-clockwise (1 turn).
6. Use the volume adjuster to adjust the pressure: (+) decrease; (-) increase.

   Note: At high pressures, it is easier to turn the wheel with the handle folded in.
7. If the volume adjuster reaches the end of its travel, close the refill valve clockwise.

   Note: Whilst the refill valve is closed, there is no change in pressure to the equipment under test or the PM 620 / PM 620-IS / PM 620T / PM 620T-IS module.
8. Turn the volume adjuster fully counter-clockwise.
9. Refill the pressure mechanism with the pump (≈ 15 cycles).
10. Turn the volume adjuster clockwise until the pressure starts to increase.
11. Continue this sequence (clockwise / counter-clockwise operation and then pump) until the necessary pressure is reached, or for full control, go back to step 5.

5. Hydraulic Pressure Operation (PV 623G / PV 623-IS)

5.1 Introduction

This chapter gives instructions on how to operate the PV 623G / PV 623-IS pressure station to supply the necessary pressure.

Before you start:

- Read and understand “Safety” on page ii.

Copyright 2022 Baker Hughes Company.

- Make sure that there is no damage to the pressure station.
- Make sure that there are no missing items.

  Note: Use only original parts supplied by the manufacturer.

Refer to Chapter 1 for a description of the pressure station controls.

5.2 Release the Pressure

To release all pressure in the system:

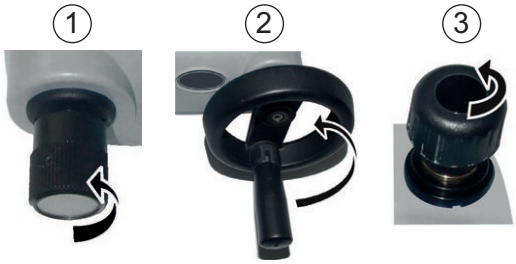

1. Open the refill valve counter-clockwise (1 turn).
2. Turn the volume adjuster fully counter-clockwise.
3. Slowly open the pressure release valve counter-clockwise (1 turn).

5.3 Filling and Priming

The following procedure describes how to fill the pressure station with hydraulic fluid and how to prime the system.

If priming a long hose, keep the open end of the hose vertical to reduce trapped air.

5.3.1 Models without Priming Pump

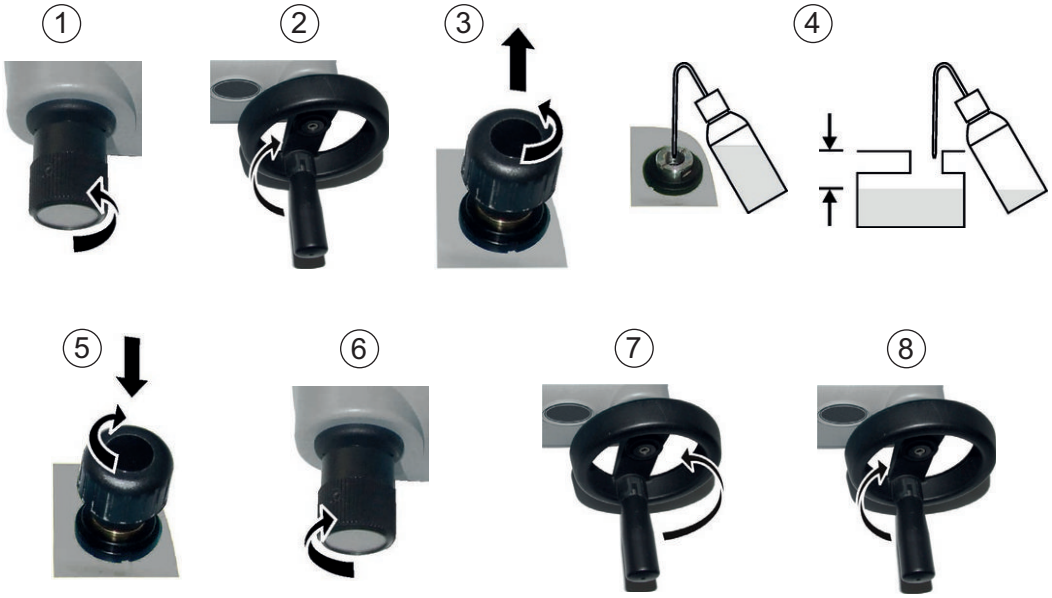

1. Open the refill valve fully counter-clockwise.
2. Turn the volume adjuster fully clockwise.
3. Remove the pressure release valve. If the reservoir is full of the correct fluid, go to step 5.
4. Use the refill bottle to add more hydraulic fluid to the reservoir. Do not put too much fluid into the reservoir. Leave a small air gap at the top of the reservoir.

   Note: To prevent contamination use only one type of hydraulic fluid in the pressure station.
5. Replace the pressure release valve. Turn fully clockwise until firmly shut.

Copyright 2022 Baker Hughes Company.

6. Close the refill valve fully clockwise (finger tight only).
7. Turn the volume adjuster fully counter-clockwise.
8. Turn the volume adjuster clockwise until the air is expelled and fluid is visible at the test port. If the volume adjuster reaches the end of its travel, repeat the procedure from step 7.
9. Continue to Section 5.4.

5.3.2 Models with Priming Pump

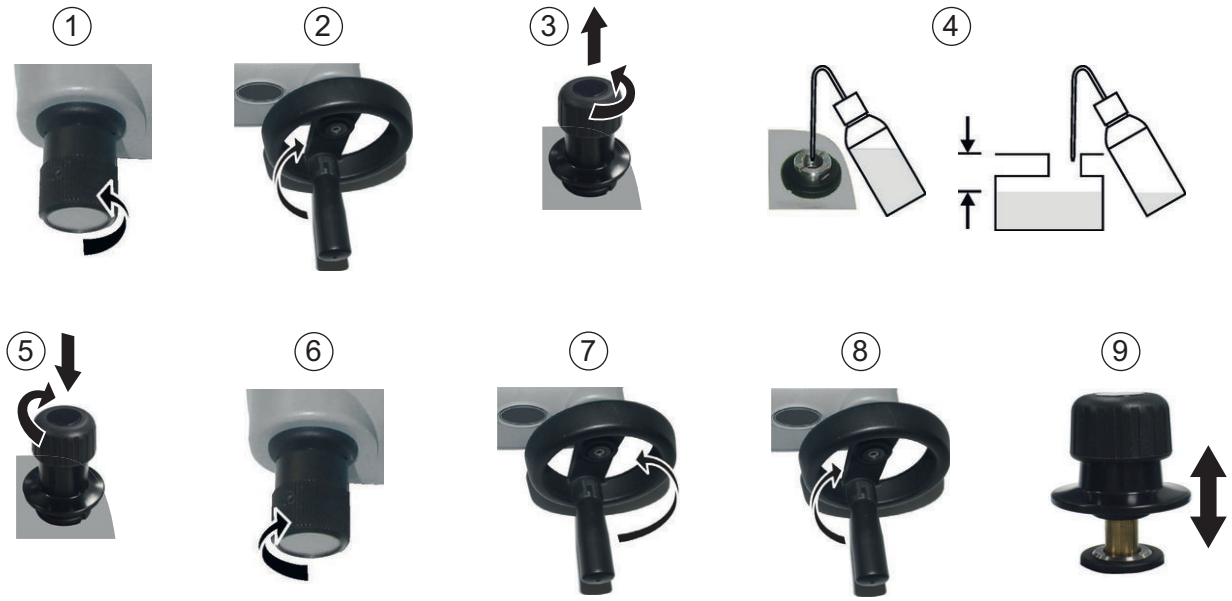

1. Open the refill valve fully counter-clockwise.
2. Turn the volume adjuster fully clockwise.
3. Remove the pressure release valve. If the reservoir is full of the correct fluid, go to step 5.
4. Use the refill bottle to add more hydraulic fluid to the reservoir. Do not put too much fluid into the reservoir. Leave a small air gap at the top of the reservoir.

   Note: To prevent contamination use only one type of hydraulic fluid in the pressure station.
5. Replace the pressure release valve. Turn fully clockwise until firmly shut.
6. Close the refill valve fully clockwise (finger tight only).
7. Turn the volume adjuster fully counter-clockwise.
8. Turn the volume adjuster 5 turns clockwise.
9. Operate the priming pump until the air is expelled and fluid is visible at the test port.
10. Continue to Section 5.4.

5.4 Operation

1. If applicable, before filling and priming the system, install a pressure relief valve. Refer to Chapter 6.
2. Connect the equipment under test to the PV 623G / PV 623-IS test port, see Chapter 2.
3. Make sure that the reservoir contains sufficient hydraulic fluid; see Section 5.3.
4. Use the following steps to set the necessary pressure.

Copyright 2022 Baker Hughes Company.

5.4.1 Pressure Procedure

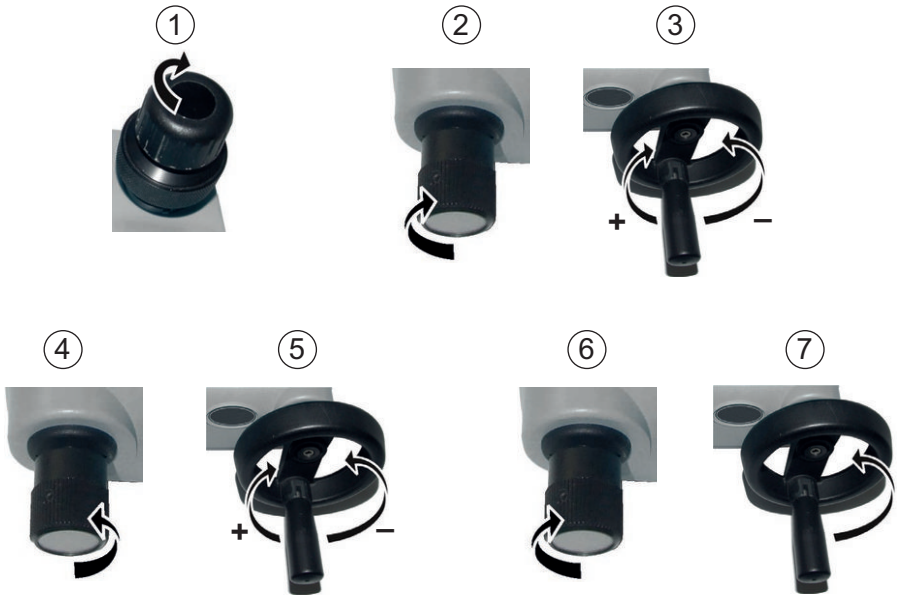

1. Close the pressure release valve fully clockwise.
2. Close the refill valve fully clockwise.
3. Turn the volume adjuster fully clockwise and then fully counter-clockwise until the pressure starts to increase.

   Continue this sequence (clockwise / counter-clockwise operation) until the necessary pressure is reached, or for full control, go to step 4.

   Note: Turning the volume adjuster counter-clockwise refills the pressure mechanism. During refill, there is no change in pressure to the equipment under test or the PM 620 / PM 620-IS / PM 620T / PM 620T-IS module.
4. Open the refill valve (1 turn).
5. Use the volume adjuster to adjust the pressure: (+) decrease; (-) increase.

   Note: At high pressures, it is easier to turn the wheel with the handle folded in.
6. If the volume adjuster reaches the end of its travel, close the refill valve fully clockwise (finger tight only).
7. Turn the volume adjuster fully counter-clockwise.
8. Repeat steps 2 to 7 until the necessary pressure is reached.

5.5 Add More Hydraulic Fluid

If the equipment under test has a large fluid capacity, it may be necessary to add more hydraulic fluid during a test.

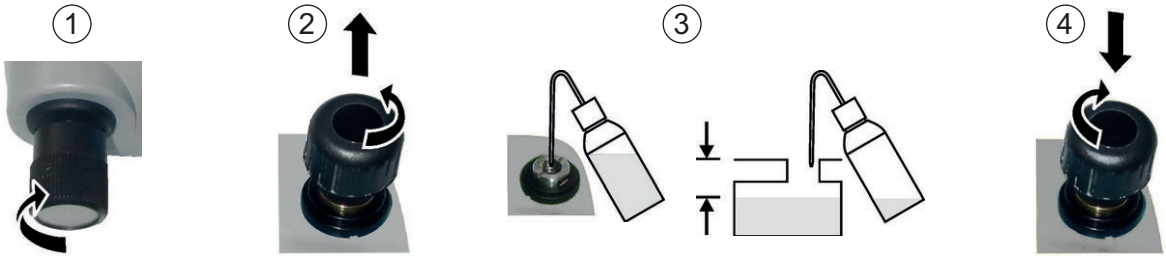

1. Close the refill valve fully clockwise (finger tight only).

   Note: Closing the refill valve seals off all pressure in the test port and the pressure module connection.

Copyright 2022 Baker Hughes Company.

2. Remove the pressure release valve.
3. Use the refill bottle to add more hydraulic fluid to the reservoir. Do not put too much fluid into the reservoir. Leave a small air gap at the top of the reservoir.

   Note: To prevent contamination use only one type of hydraulic fluid in the pressure station.
4. Replace the pressure release valve. Turn fully clockwise until firmly shut.
5. Return to the procedure in Section 5.4.1.

5.6 Drain Hydraulic Fluid from Equipment Under Test

If additional hydraulic fluid was used during a pressure test, drain the excess fluid from the equipment under test.

If it is safe and there is no risk of contamination, the hydraulic fluid can be left inside of the equipment under test.

5.6.1 Preparation

To drain the equipment under test, the following items are recommended:

- Applicable skin and eye protection.
- A sufficiently large container to hold the hydraulic fluid.
- Applicable materials to clean the pressure station, refer to Chapter 7.

5.6.2 Procedure

1. Release the pressure (Section 5.2).
2. Remove the equipment under test (Chapter 2). Do not let the hydraulic fluid spill onto the PV 623G / PV 623-IS.
3. If necessary, drain the hydraulic fluid from the equipment under test.

Note: To discard the hydraulic fluid, obey all the local health and safety procedures.

5.7 Drain Hydraulic Fluid from PV 623G / PV 623-IS

In some conditions it is necessary to fully drain the hydraulic fluid from the PV 623G / PV 623-IS pressure station; for example:

- When using water as the hydraulic fluid and the storage temperature is less than 4°C (39°F).
- Preparing the pressure station for a long period of storage.
- If there is contamination in the hydraulic fluid.

5.7.1 Preparation

To drain the pressure station, the following items are recommended:

- Applicable skin and eye protection.
- A sufficiently large container to hold the hydraulic fluid.
- Applicable materials to clean the pressure station, refer to Chapter 7.

Copyright 2022 Baker Hughes Company.

5.7.2 Procedure

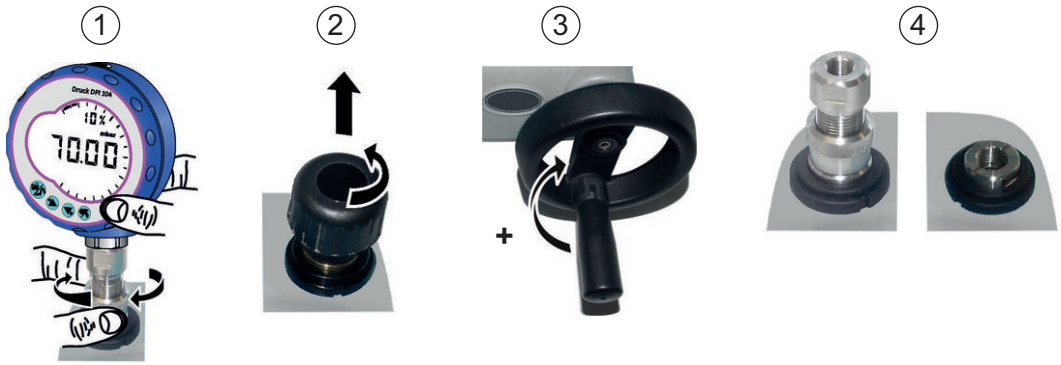

1. If applicable, release the pressure (Section 5.2) and remove the equipment under test (Chapter 2).

   Note: If connected, remove the DPI 620G / DPI 620G-IS calibrator.
2. Remove the pressure release valve.
3. Turn the volume adjuster wheel fully clockwise. This removes the fluid out of the pressure mechanism.
4. Put a container below the pressure station. Tilt the pressure station until all the fluid has come out. Fluid comes out of the test port and the pressure release valve connection.

   Note: To discard the hydraulic fluid, obey all the local health and safety procedures.
5. To remove contaminated hydraulic fluid, refill the system and repeat steps 3 and 4.

   Note: To prevent contamination use only one type of hydraulic fluid in the pressure station.

6. Pressure Relief Valve (PRV)

WARNING **Pressurized gases and fluids are dangerous. Before you connect or disconnect pressure equipment, safely release all pressure.**

CAUTION **To prevent damage to the pressure station, do not let dirt get into the pressure mechanism. Before fitting the pressure relief valve (PRV), make sure it is clean.**

6.1 Introduction

Use a pressure relief valve (PRV) to limit the pressure you can apply to the equipment under test. The PRV is factory set to operate at the maximum pressure specified on the label (on the plastic cap).

If the pressure in the pressure station is more than the PRV relief pressure, the PRV controls a slow release of the unwanted pressure. The correct PRV helps prevent overpressure and damage to the equipment under test. To adjust the PRV, see Section 6.3.

Copyright 2022 Baker Hughes Company.

6.2 Installation

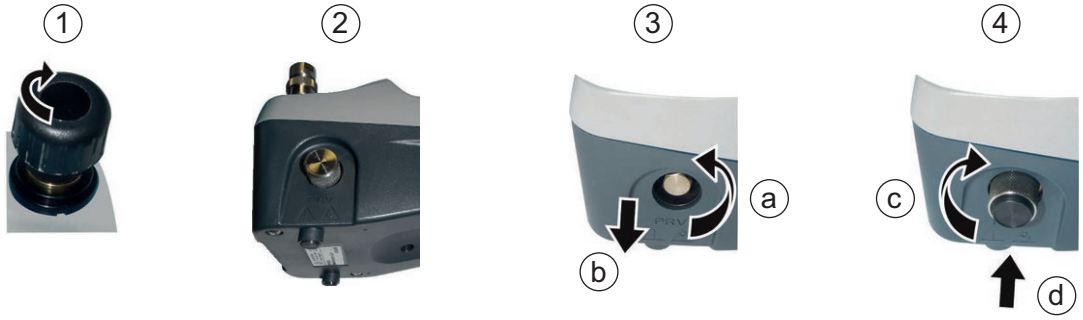

Use the following steps to install the pressure relief valve:

1. Hydraulic units only: Close the pressure release valve fully clockwise.
2. Put the pressure station on its side.
3. Steps (a) and (b): Remove the blanking plug or existing PRV.

   Note: Dry and clean the removed PRV and put it into storage.
4. Steps (c) and (d): Select a clean, dry PRV with the correct pressure rating for the devices you are using. Install it and tighten it into position (hand tight only).

6.3 Adjustment Procedure

INFORMATION **Adjusting the pressure relief valve (PRV) invalidates the factory setting.**

For the PRV adjustable range, refer to Table 3 on page 16.

Use the following steps to adjust the relief pressure:

1. Connect an applicable pressure indicator to the test port, or use a DPI 620G / DPI 620G-IS calibrator with a PM 620 / PM 620-IS / PM 620T / PM 620T-IS module.
2. Remove the plastic cap from the end of the PRV.
3. Set the necessary pressure with the pressure station.
4. When the pressure in the pressure station is at the new relief pressure, turn the adjustment screw until the PRV operates.
   - Counter-clockwise decreases the operating pressure.
   - Clockwise increases the operating pressure.
5. Repeat steps 3 and 4 until the PRV operates at the correct pressure.
6. When completed, press the plastic cap back into position.

7. Maintenance

7.1 Introduction

This chapter gives procedures to maintain the unit in a good condition.

7.2 Repair

Do not do repairs to this equipment. Return the equipment to the manufacturer or an approved service agent.

Copyright 2022 Baker Hughes Company.

7.3 Cleaning



CAUTION To prevent damage to the pressure station, do not let dirt get into the pressure mechanism. Before you connect equipment, make sure it is clean.

Clean the case with a moist, lint-free cloth and a weak detergent. Do not use solvents or abrasive materials.

7.4 Draining the Unit (PV 623G / PV 623-IS Models)



CAUTION Ice in the pressure mechanism can cause damage. If the temperature is less than 4°C (39°F), drain all water from the pressure station. Refer to Section 5.7

7.5 Leak Test

Table 2 on page 15 gives the maximum leak rates for each type of PV 62XG / PV 62X-IS pressure station.

7.5.1 Preparation

To do a leak test, we recommend these items:

1. A DPI 620G / DPI 620G-IS calibrator.
2. The applicable PM 620 / PM 620-IS module for the pressure station:
   - PV 621G / PV 621-IS models: P/N PM620-13G / PM620S-13G (20 bar)
   - PV 622G / PV 622-IS models: P/N PM620-165G / PM620S-165G (100 bar)
   - PV 623G / PV 623-IS models: P/N PM620-23A / PM620S-23A (1000 bar)
3. An applicable blanking adaptor to seal the test port connection.
4. PV 623G / PV 623-IS models only: Demineralized water.

7.5.2 Procedure

1. Seal the test port connection with the blanking plug.
2. Connect the applicable PM 620 / PM 620-IS module:
   - PV 621G / PV 621-IS models: P/N PM620-13G / PM620S-13G (20 bar)
   - PV 622G / PV 622-IS models: P/N PM620-165G / PM620S-165G (100 bar)
   - PV 623G / PV 623-IS models: P/N PM620-23A / PM620-23A (1000 bar)
3. Connect a DPI 620G / DPI 620G-IS calibrator and set the power on.
4. Do the test for maximum pressure or maximum vacuum.

7.5.2.1 Maximum Pressure Test

1. Use the applicable procedure for the pressure station to set the maximum pressure:
   - PV 621G / PV 621-IS models: Chapter 3 Set the pressure to 20 bar.
   - PV 622G / PV 622-IS models: Chapter 4 Set the pressure to 100 bar.
   - PV 623G / PV 623-IS models: Chapter 5 Set the pressure to 1000 bar.
2. Set the DPI 620G / DPI 620G-IS calibrator to do a Leak Test:
   - Channel Settings: Units = Bar; Utility = Leak Test
   - Settings: Test Time = 00:01:00 (1 minute)
3. Let the pressure become stable for 1 minute.

Copyright 2022 Baker Hughes Company.

4. Start the test. When it finishes, compare the result with the specified leak rate. Refer to Table 2 on page 15.

7.5.2.2 Maximum Vacuum Test

1. PV 621G / PV 621-IS / PV 622G / PV 622-IS models only. Use the applicable procedure for the pressure station to set the maximum vacuum:
   - PV 621G / PV 621-IS models: Chapter 3 Set the pressure to -950 mbar.
   - PV 622G / PV 622-IS models: Chapter 4 Set the pressure to -950 mbar.
2. Set the DPI 620G / DPI 620G-IS calibrator to do a Leak Test:
   - Channel Settings: Units = Bar; Utility = Leak Test
   - Settings: Test Time = 00:01:00 (1 minute)
3. Let the pressure become stable for 1 minute.
4. Start the test. When it finishes, compare the result with the specified leak rate. Refer to Table 2 on page 15.

7.6 Return Goods/Material Procedure

If the unit requires calibration or is defective, return it to the nearest Druck Service Centre listed at:

Druck.com

Contact the Service Department to obtain a Return Goods/Material Authorization (RGA or RMA). Provide the following information for a RGA or RMA:

- Product (e.g. PV 621G)
- Serial number.
- Details of defect/work to be undertaken.
- Calibration traceability requirements.
- Operating conditions.

8. Specification

CAUTION **PV 623G / PV 623-IS models only. Ice in the pressure mechanism can cause damage. If the temperature is less than 4°C (39°F), drain all water from the pressure station.**

For a full specification of the PV 62XG / PV 62X-IS pressure stations, refer to the datasheet.

Table 1: General Specification

Item	Description
Operating temperature	-10 to 50°C (14 to 122°F) PV 623G / PV 623-IS models only: See caution.
Storage temperature	-20 to 70°C (-4 to 158°F) PV 623G / PV 623-IS models only: See caution.
Pressure safety	Pressure Equipment Directive - Class: Sound Engineering Practice (SEP)

Copyright 2022 Baker Hughes Company.

Table 1: General Specification

Item	Description
Size (L:W:H)	PV 621G / PV 621-IS: ≈ 350 x 160 x 150 mm (13.8 x 6.3 x 5.9 in) PV 623G / PV 623-IS: ≈ 350 x 160 x 150 mm (13.8 x 6.3 x 5.9 in) PV 622G / PV 622-IS: ≈ 350 x 160 x 160 mm (13.8 x 6.3 x 6.3 in)
Weight (Pressure stations, calibrator and pressure module)	PV 621G / PV 621-IS only: ≈ 2.65 kg (5.8 lb) PV 622G / PV 622-IS only: ≈ 3.30 kg (7.3 lb) PV 623G / PV 623-IS only: ≈ 3.75 kg (8.3 lb)
Pressure connections	Test port: G1/8 or 1/8NPT “Quick fit” pressure adaptors supplied. Adaptors for other thread types are available from Druck. Other connections: For specified accessories only.
Hydraulic fluid (PV 623G / PV 623-IS models only)	Reservoir capacity: 100 cm^3 (6.1 in^3) Fluid type: Mineralized water or a mineral oil (Recommended ISO viscosity grade ≤ 22)

Table 2: Pressure Specification

Item	PV 621G PV 621-IS (Pneumatic)	PV 622G PV 622-IS (Pneumatic)	PV 623G PV 623-IS (Hydraulic)
Range	-950 mbar to 20 bar (-13.5 to 300 psi)	-950 mbar to 100 bar (-13.5 to 1500 psi)	0 to 1000 bar (0 to 15000 psi)
Minimum resolution with a typical test volume	0.001 bar (0.0145 psi)	0.005 bar (0.0725 psi)	0.1 bar (1.45 psi)
Pressure system volume:			
1) V1: Volume adjuster	≈ 9.6 cm^3 (0.6 in^3)	≈ 16.8 cm^3 (1.0 in^3)	≈ 1.7 cm^3 (0.1 in^3)
2) V2: Pump	≈ 14.3 cm^3 (0.9 in^3)	≈ 14.3 cm^3 (0.9 in^3)	Not applicable
3) V3: Other	≈ 3.0 cm^3 (0.2 in^3)	≈ 3.0 cm^3 (0.2 in^3)	≈ 2.0 cm^3 (0.1 in^3)
Total: V1 + V3	≈ 12.6 cm^3 (0.8 in^3)	≈ 19.8 cm^3 (1.2 in^3)	≈ 3.7 cm^3 (0.2 in^3)
Material of wetted parts.	Aluminum, brass, stainless steel, nitrile and polyurethane seals, PTFE, acetal, nylon	Aluminum, brass, stainless steel, nitrile and polyurethane seals, PTFE, acetal, nylon	Brass, stainless steel, phosphor bronze, nitrile and polyurethane seals, PTFE, polyethylene
Leak rate at maximum pressure.	0.01 bar/min (0.145 psi/min)	0.02 bar/min (0.29 psi/min)	1 bar/min (14.5 psi/min)
Leak rate at maximum vacuum.	0.005 bar/min (0.073 psi/min)	0.01 bar/min (0.145 psi/min)	Not applicable
Material of enclosure and controls.	Polycarbonate, Polyamide, Polypropylene, Acrylic, Cotton	Aluminum, Polycarbonate, Polyamide, Polypropylene, Acrylic, Cotton	Polycarbonate, Polyamide, Polypropylene, Acrylic, Cotton

Copyright 2022 Baker Hughes Company.

Table 3: Pressure Relief Valves

Part Number	Pressure Media	Factory Setting	Adjustable Range
IO620-PRV-P1	Pneumatic	1 bar (15 psi)	0.2 to 1 bar (3 to 15 psi)
IO620-PRV-P2	Pneumatic	5 bar (73 psi)	3 to 7 bar (45 to 100 psi)
IO620-PRV-P3	Pneumatic	30 bar (435 psi)	16 to 32 bar (230 to 460 psi)
IO620-PRV-P4	Pneumatic	60 bar (870 psi)	30 to 60 bar (435 to 870 psi)
IO620-PRV-P5	Pneumatic	100 bar (1500 psi)	60 to 100 bar (870 to 1,500 psi)
IO620-PRV-P6	Pneumatic	3 bar (45 psi)	1.1 to 3 bar (16 to 45 psi)
IO620-PRV-P7	Pneumatic	12 bar (170 psi)	6.1 to 12 bar (90 to 170 psi)
IO620-PRV-P8	Pneumatic	18 bar (260 psi)	12.1 to 18 bar (175 to 260 psi)
IO620-PRV-H1	Hydraulic	50 bar (725 psi)	10 to 50 bar (145 to 725 psi)
IO620-PRV-H2	Hydraulic	200 bar (3000 psi)	50 to 200 bar (725 to 2,900 psi)
IO620-PRV-H3	Hydraulic	400 bar (6000 psi)	200 to 400 bar (2,900 to 5,800 psi)
IO620-PRV-H4	Hydraulic	700 bar (10,000 psi)	300 to 700 bar (4,350 to 10,000 psi)
IO620-PRV-H5	Hydraulic	1000 bar (15,000 psi)	600 to 1000 bar (8,700 to 15,000 psi)

Copyright 2022 Baker Hughes Company.

Office Locations

Headquarters

Leicester, UK
+44 (0) 116 2317233
gb.sensing.sales@bakerhughes.com

Australia

North Sydney
1300 171 502
custcare.au@bakerhughes.com

China

Beijing
+86 180 1929 3751
fan.kai@bakerhughes.com

China

Guangzhou
+86 173 1081 7703
dehou.zhang@bakerhughes.com

China

Shanghai
+86 135 6492 6586
hensen.zhang@bakerhughes.com

France

Toulouse
+33 562 888 250
sensing.FR.cc@bakerhughes.com

Germany

Frankfurt
+49 (0) 69-22222-973
sensing.de.cc@bakerhughes.com

India

Bangalore
+91 9986024426
aneesh.madhav@bakerhughes.com

Italy

Milan
+39 02 36 04 28 42
csd.italia@bakerhughes.com

Japan

Tokyo
+81 3 6890 4538
gesitj@bakerhughes.com

Netherlands

Hoevelaken
+31 334678950
nl.sensing.sales@bakerhughes.com

Russia

Moscow
+7 915 3161487
aleksey.khamov@bakerhughes.com

UAE

Abu Dhabi
+971 528007351
suhel.aboobacker@bakerhughes.com

USA

Boston
1-800-833-9438
custcareboston@bakerhughes.com

Services and Support Locations

Tech Support

Global
drucktechsupport@bakerhughes.com

Brazil

Campinas
+55 19 2104 6924, +55 19 97169 1190
cc.sensing.brasil@bakerhughes.com

China

Changzhou
+86 400 818 1099
service.mcchina@bakerhughes.com

France

Toulouse
+33 562 888 250
sensing.FR.cc@bakerhughes.com

India

Pune
+91-2135-620421~425
mcindia.inhouseservice@bakerhughes.com

Japan

Tokyo
+81 3 6894 1838
service.druck.jp@bakerhughes.com

UAE

Abu Dhabi
+971 2 4079381
gulfservices@bakerhughes.com

UK

Leicester
+44 (0) 116 2317107
sensing.grobycc@bakerhughes.com

USA

Billerica
+1 (281) 542-3650
namservice@bakerhughes.com

Copyright 2022 Baker Hughes Company. This material contains one or more registered trademarks of Baker Hughes Company and its subsidiaries in one or more countries. All third-party product and company names are trademarks of their respective holders.

132M9253 Revision - | English

Baker Hughes

bakerhughes.com