Photoelectric Sensors

BOS 6K-UI-PT10-S75
Order Code: BOS02E2

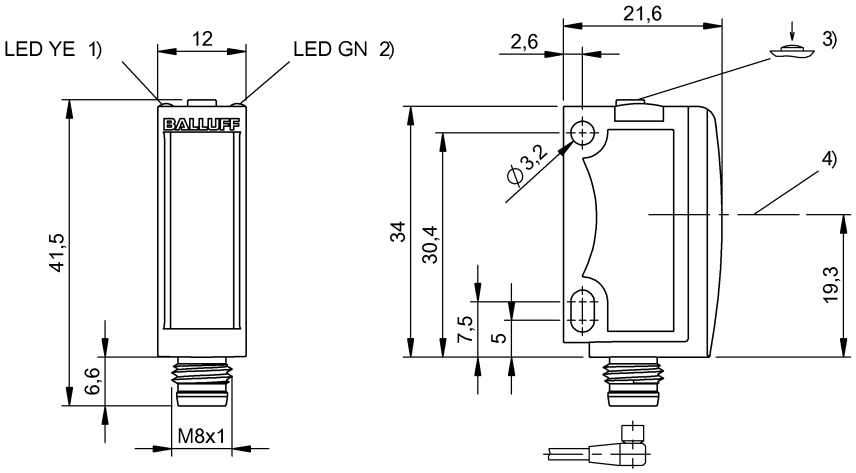

1) Output function, 2) Operating voltage, 3) Sensitivity, light/dark, 4) Optical axis

Basic features

Approval/Conformity	CE UKCA cULus WEEE
Basic standard	IEC 60947-5-2
Operating mode	SIO Mode IO-Link Mode
Principle of operation	Photoelectric sensor
Reference reflector	BOS R-22
Series	6K
Style	Square Connection 90°

Display/Operation

Adjuster	button
Display	Output function- LED yellow supply voltage - LED green
Setting	Teach mode Stand./Dyn. Sensitivity (Sn) Light-on/dark-on

Electrical connection

Connection	Connector, M8x1-Male, 4-pin
Polarity reversal protected	yes
Short-circuit protection	yes

Electrical data

Input function	Key disable on/off Same function as button
No-load current Io max. at Ue	30 mA
Operating voltage Ub	10...30 VDC
Protection class	II
Rated operating current Ie	100 mA
Rated operating voltage Ue DC	24 V
Switching frequency	1000 Hz
Turn-off delay toff max.	0.5 ms
Turn-on delay ton max.	0.5 ms
Voltage drop Ud max. at Ie	3.5 V

Environmental conditions

Ambient temperature	-20...60 °C
EN 60068-2-27, Shock	Half-sinus, 30 g_n, 11 ms, 3x6
EN 60068-2-6, Vibration	10...55 Hz, amplitude 0.5 mm, 3x30 min
IP rating	IP67, IP69
Storage temperature	-20...80 °C

Functional safety

MTTF (40 °C)	355 a

Photoelectric Sensors

BOS 6K-UI-PT10-S75
Order Code: BOS02E2

IO-Link

IO-Link Profil IDs	0x0004 SSP2.1 0x0005 SSP2.2 0x0006 SSP2.3 0x4000 Identification and Diagnosis
IO-Link function classes	0x800C Transducer Disable 0x8101 Locator

Interface

Baud rate	COM2 (38.4 kBaud)
Interface	IO-Link-Device 1.1.3
Process data IN	1 byte
Process data OUT	1 byte
Switching output	PNP/NPN/IO-Link NO/NC

Material

Housing material	ABS
Material sensing surface	PMMA

Mechanical data

Dimension	12 x 34 x 21.6 mm
Mounting part	Screw M3

Optical features

Ambient light max.	5000 Lux
Beam characteristic	Divergent
Light spot size	40 x 40 mm at 1 m
Light type	LED, red light
Polarizing filter	yes
Principle of optical operation	Retroreflective sensor, Transparent detection
Special optical feature	Transparency detection
Switching function, optical	dark-on/light-on
Wave length	632 nm

Range/Distance

Range	0...2 m

Remarks

The sensor is functional again after the overload has been eliminated.
Order accessories separately.
For more information about MTTF and B10d see MTTF / B10d Certificate

Indication of the MTTF- / B10d value does not represent a binding composition and/or life expectancy assurance; these are simply experiential values with no warranty implications. These declared values also do not extend the expiration period for defect claims or affect it in any way.

Connector Drawings



Wiring Diagrams (Schematic)

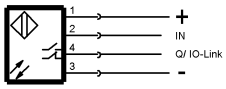

Opto Symbols

