JUMO GmbH & Co. KG
Delivery address: Mackenrodtstraße 14
36039 Fulda, Germany
Postal address: 36035 Fulda, Germany
Phone: +49 661 6003-0
Fax: +49 661 6003-607
Email: mail@jumo.net
Internet: www.jumo.net

JUMO Instrument Co. Ltd.
JUMO House
Temple Bank, Riverway
Harlow, Essex CM 20 2DY, UK
Phone: +44 1279 63 55 33
Fax: +44 1279 62 50 29
Email: sales@jumo.co.uk
Internet: www.jumo.co.uk

JUMO Process Control, Inc.
6733 Myers Road
East Syracuse, NY 13057, USA
Phone: +1 315 437 5866
Fax: +1 315 437 5860
Email: info.us@jumo.net
Internet: www.jumousa.com

JUMO digiLine pH/ORP/T

Intelligent electronics with digital interface or analog output for pH, redox, and temperature sensors



Type 202705

Brief description

General information
JUMO digiLine electronics permit transmission of the measured value from the sensor to the measuring or automation device via digital bus communication or as an analog signal. The digital device version has a 5-pole, the analog version an 8-pole M12 plug connector. The 5-pole digiLine electronics supports plug & play operation on the JUMO AQUIS touch S/P or in Modbus operation on the JUMO mTRON T. Several sensors continuously transmit their measurement data over the bus to a master. As an alternative, the 8-pole device version can also be used. It is designed as a 2-wire transmitter with analog output and transmits measured values in the form of a scalable standard signal (4 to 20 mA). The 8-pole device version features a digital input that can be configured as a switching signal of the analog output value between pH measured value and temperature value as well as a hold signal for the analog output value. Additionally, the digital input for the measurement inputs of the eight-pole device version can be configured as a hold signal.

Mounting and connecting
JUMO digiLine electronics is available with N-connection for commercially available pH/redox sensors or with Variopin connection for JUMO sensors with an integrated temperature probe and is simply attached to the sensor and screwed tight. The JUMO Type 201085 compensation thermometer can also be operated with it. If it is necessary to replace the sensor because of a defect or wear, the transmitter can be unscrewed and used again on the new sensor. The threaded connection between the sensor and transmitter guarantees protection type IP66 and IP67 to prevent malfunctions caused by ingress of moisture. The electrical connection is established easily and quickly by attaching (plug in and screw on) a preassembled bus cable (available from JUMO).

Configuration, parameterization and calibration
Normally, the 5-pole JUMO digiLine electronics are configured, parameterized, and calibrated via operation on the JUMO AQUIS touch S/P. The calibration, however, also be conveniently carried out in the laboratory on a PC using the JUMO DSM-Software (**D**igital **S**ensor **M**anagement software). The 8-pole device version is configured, parameterized, and calibrated via the JUMO DSM software. With the USB-RS485 interface (part no.: 00638346), the electronics must be connected to a PC.

System example



Special features

- Reliable transmission of measured values over the JUMO digiLine bus

  Easy, time-saving bus cable installation with read-to-use cable (available as accessory)
- Sensor calibration on a PC with storage of the calibration data in the JUMO digiLine electronics
- Cost savings when replacing sensors through transfer of the digiLine electronics to the new sensor
- Easy and time-saving Plug & Play installation on the JUMO AQUIS touch S/P

JUMO GmbH & Co. KG
Delivery address: Mackenrodtstraße 14
36039 Fulda, Germany
Postal address: 36035 Fulda, Germany
Phone: +49 661 6003-0
Fax: +49 661 6003-607
Email: mail@jumo.net
Internet: www.jumo.net

JUMO Instrument Co. Ltd.
JUMO House
Temple Bank, Riverway
Harlow, Essex CM 20 2DY, UK
Phone: +44 1279 63 55 33
Fax: +44 1279 62 50 29
Email: sales@jumo.co.uk
Internet: www.jumo.co.uk

JUMO Process Control, Inc.
6733 Myers Road
East Syracuse, NY 13057, USA
Phone: +1 315 437 5866
Fax: +1 315 437 5860
Email: info.us@jumo.net
Internet: www.jumousa.com

Block diagram

5-pole version

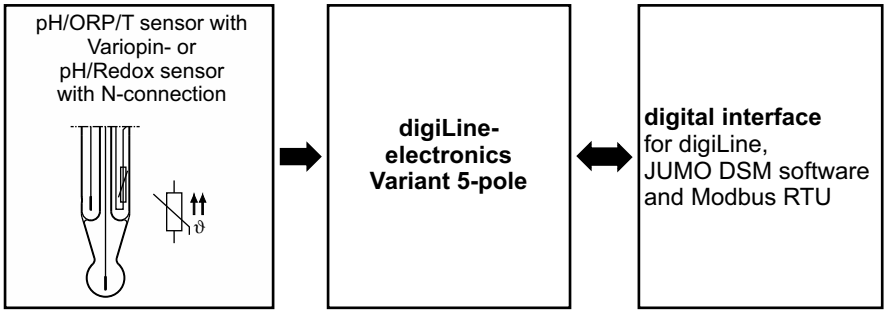

8-pole version

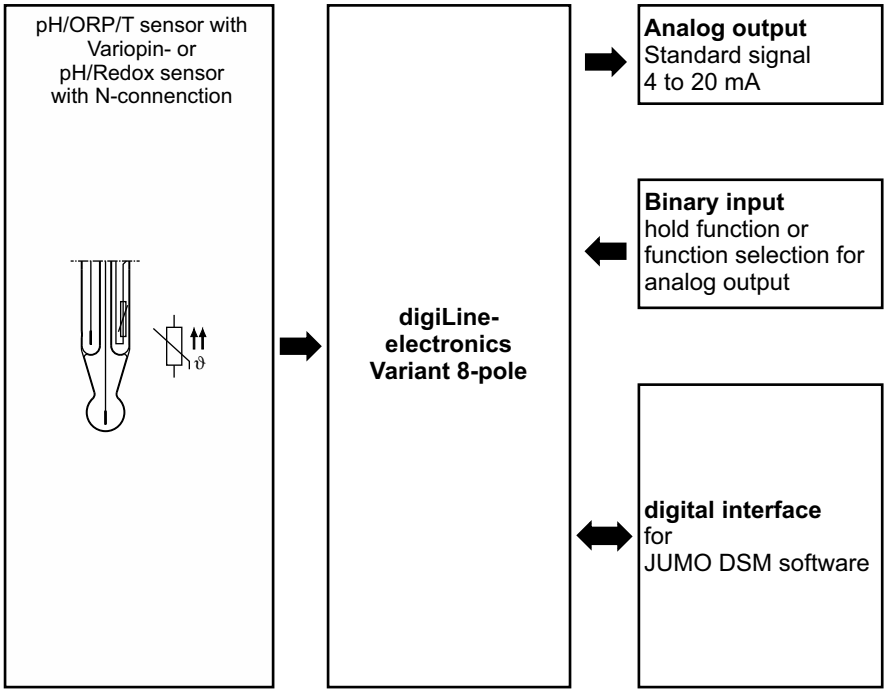

JUMO GmbH & Co. KG
Delivery address: Mackenrodtstraße 14
36039 Fulda, Germany
Postal address: 36035 Fulda, Germany
Phone: +49 661 6003-0
Fax: +49 661 6003-607
Email: mail@jumo.net
Internet: www.jumo.net

JUMO Instrument Co. Ltd.
JUMO House
Temple Bank, Riverway
Harlow, Essex CM 20 2DY, UK
Phone: +44 1279 63 55 33
Fax: +44 1279 62 50 29
Email: sales@jumo.co.uk
Internet: www.jumo.co.uk

JUMO Process Control, Inc.
6733 Myers Road
East Syracuse, NY 13057, USA
Phone: +1 315 437 5866
Fax: +1 315 437 5860
Email: info.us@jumo.net
Internet: www.jumousa.com

Device setup

JUMO digiLine electronics with Variopin connection

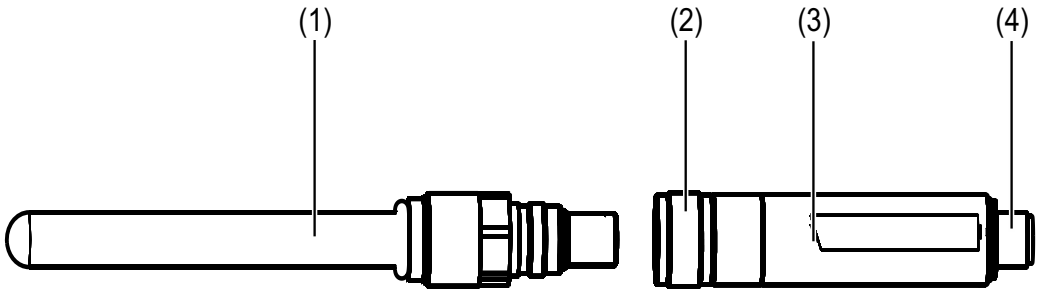

(1) Sensor with Variopin connection
(2) Variopin connection of digiLine electronics
(3) JUMO digiLine electronics
(4) M12 plug connector, 5 or 8-pole (see order details)

JUMO digiLine electronics with N connection

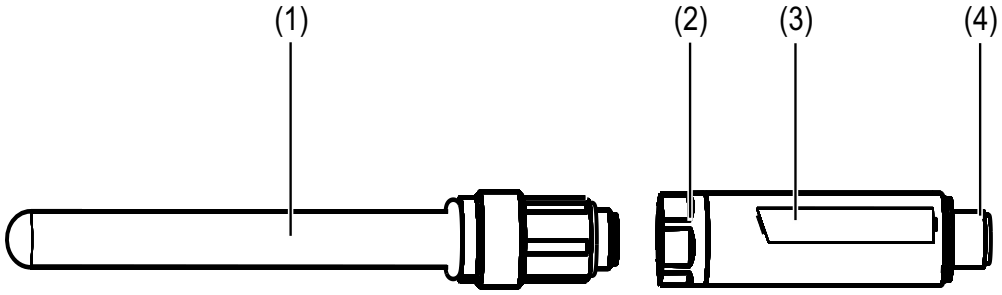

(1) Sensor with N-connection
(2) N-connection of digiLine electronics
(3) JUMO digiLine electronics
(4) M12 plug connector, 5 or 8-pole (see order details)

JUMO GmbH & Co. KG
Delivery address: Mackenrodtstraße 14
36039 Fulda, Germany
Postal address: 36035 Fulda, Germany
Phone: +49 661 6003-0
Fax: +49 661 6003-607
Email: mail@jumo.net
Internet: www.jumo.net

JUMO Instrument Co. Ltd.
JUMO House
Temple Bank, Riverway
Harlow, Essex CM 20 2DY, UK
Phone: +44 1279 63 55 33
Fax: +44 1279 62 50 29
Email: sales@jumo.co.uk
Internet: www.jumo.co.uk

JUMO Process Control, Inc.
6733 Myers Road
East Syracuse, NY 13057, USA
Phone: +1 315 437 5866
Fax: +1 315 437 5860
Email: info.us@jumo.net
Internet: www.jumousa.com

Description

Digital interface

The digital interface is the heart of the JUMO digiLine electronics. This interface handles communication over the bus by means of the JUMO digiLine protocol. The plug & play support for the JUMO digiLine electronics simplifies sensor startup considerably. After connecting to the JUMO AQUIS touch S/P, the JUMO digiLine electronics are configured automatically and ready for use immediately.
As an alternative to JUMO digiLine operation with plug & play support on the JUMO AQUIS touch S/P, Modbus operation (Modbus-RTU) on the JUMO mTRON T with access to the measured data is also possible. The JUMO digiLine electronics are then configured via the JUMO DSM software.

JUMO Digital Sensor Management Software for the PC

The JUMO DSM software (DSM stands for **D**igital **S**ensor **M**anagement) can be used to manage, calibrate, and test JUMO digiLine electronics on the PC. It also serves as a configuration tool for JUMO digiLine electronics in the 8-pole device version (2-wire transmitter with analog output). The connection to the PC is achieved via a USB-RS485 interface (part no.: 00655787). The JUMO DSM software adds data from the memory of JUMO digiLine electronics to its sensor database. The sensor database holds calibration logbook entries, histories about replaced sensors and configuration changes to the JUMO digiLine electronics. If the JUMO digiLine electronics are to be mounted to a new sensor, data for the new sensor can be reset via the JUMO DSM software and the information from the old sensor archived on the PC.

analog output

In addition to the digital interface, the device version with an 8-pole M12 plug connector has an analog output for operation as a 2-wire transmitter. The analog output provides the pH/redox measured value or the measured value of the temperature input as a freely-scalable standard signal of 4 to 20 mA. With the digital input, the analog signal on sensors with integrated temperature probe can be switched over from the pH/redox measured value to the temperature measured value or a hold function for activating the output of a configurable substitute value. The RS485 interface serves to connect to the PC in order to configure the 8-pole JUMO digiLine electronics on the PC using the JUMO DSM software.

Digital input

The digital input (available only in the variant with 8-pole M12 plug connector) can be configured for the following functions:

- Activation of hold function for the analog output
- Switching the analog output from pH measured value to temperature measured value
- Activation of hold function for the measurement input signals

Temperature compensation

Temperature compensation is handled by the digiLine electronics. When a JUMO pH sensor with integrated temperature probe is used, the digiLine electronics can obtain the temperature compensation directly from the sensor. Alternatively, the compensation temperature can be transmitted from the digiLine master device (JUMO AQUIS touch S/P) or a fixed temperature can be specified in the configuration of the digiLine electronics.

Calibration

The calibration of sensors with JUMO digiLine electronics can either be performed in the field on the JUMO AQUIS touch S/P or at a laboratory workstation using the JUMO DSM software. The calibration data are saved in the JUMO digiLine electronics of the sensor. The sensor calibration can therefore be performed ahead of commissioning, so that the sensor with its JUMO digiLine electronics can then simply be mounted on the system. This reduces the plant downtime to a minimum when it becomes necessary to replace the sensor.

Calibration timer

The JUMO digiLine electronics has a calibration timer which, after a set calibration interval has lapsed, is able to trigger a reminder for the due sensor calibration on the JUMO AQUIS touch S/P. The calibration interval setting can be edited via the configuration menu of the JUMO AQUIS touch S/P or using the JUMO DSM software. At each sensor calibration, the calibration interval is restarted.

Calibration logbook

The JUMO digiLine electronics contain a calibration logbook in which the last 10 calibration operations are saved with the date, time, and calibration values. This logbook provides an overview of the calibration history of the sensor. The calibration logbook can be read-out either at the JUMO AQUIS touch S/P or using the JUMO DSM software on the PC. There is no limit to the number of saved calibration logbook entries for JUMO digiLine electronics in the JUMO DSM software.

Sensor information

Numerous data such as type information, operating data, information on measuring point identification etc. are stored in the JUMO digiLine electronics. This information allows clear identification and optimal management of each sensor. All these data can be viewed on the JUMO AQUIS touch S/P or using the JUMO DSM software.

Sensor monitoring

To monitor the stress on the sensor from sensor cleaning, counters for autoclaving,
CIP, and SIP cycles are incorporated. CIP and SIP cycles are recognized automatically on the basis of the criteria specified in the configuration for sensor monitoring. The autoclaving counter is incremented manually with the JUMO DSM software. The counters for the autoclaving, CIP, and SIP cycles each retain the number of cleaning processes performed. The counter readings can be queried on the JUMO AQUIS touch S/P in order to assess the wear status of the sensor. Upon reaching a configured counter reading, an alarm is signaled on the digiLine master. After a sensor has been replaced, the counters are reset with the JUMO DSM software.

Sensor stress

To assess the stress on the sensor from the thermal and chemical environment, the current "sensor stress" is calculated on the basis of the measurement data provided by the sensor. In the JUMO digiLine electronics, an alarm signal for the sensor stress can be configured. When a critical sensor stress level on the master is reached, this signals a sensor stress alarm.

JUMO GmbH & Co. KG
Delivery address: Mackenrodtstraße 14
36039 Fulda, Germany
Postal address: 36035 Fulda, Germany
Phone: +49 661 6003-0
Fax: +49 661 6003-607
Email: mail@jumo.net
Internet: www.jumo.net

JUMO Instrument Co. Ltd.
JUMO House
Temple Bank, Riverway
Harlow, Essex CM 20 2DY, UK
Phone: +44 1279 63 55 33
Fax: +44 1279 62 50 29
Email: sales@jumo.co.uk
Internet: www.jumo.co.uk

JUMO Process Control, Inc.
6733 Myers Road
East Syracuse, NY 13057, USA
Phone: +1 315 437 5866
Fax: +1 315 437 5860
Email: info.us@jumo.net
Internet: www.jumousa.com

Technical data

Digital interface

Protocol	digiLine[a] or Modbus RTU[b]
Device address	1 to 247
Data formats[c]	8 - 1 - no parity 8 - 2 - no parity 8 - 1 - odd parity 8 - 1 - even parity
Baud rates	9600 baud 19200 baud 38400 baud
Minimum response time	0 to 500 ms

[a] The digiLine protocol assigns the interface parameters automatically during startup (plug & play).

[b] The Modbus RTU protocol is used to operate the digiLine electronics on a JUMO mTRON T CPU. For operation on a JUMO mTRON T, the interface parameters must be set prior to initial commissioning with the JUMO DSM software.

[c] Specification in useful bit - stop bit - parity format.

Analog inputs (sensor connection side)

Input	Measuring range	Connection type	Measuring accuracy	Ambient temperature influence
Primary measurement input[a]				
pH	-2 to 16 pH		±0.5 % of MR[b]	0.3 % / 10 K
Redox	-1500 to +1500 mV		±0.5 % of MR[b]	0.3 % / 10 K
Temperature measurement input[c]	-20 to 150 °C	Pt1000 in 2-wire electrical circuit	±0.2 % of MR[b]	≤ 100 ppm/K

[a] Measurand depends on basic type extension (see order details)

[b] MR: measuring range span

[c] Temperature input (for temperature compensation) may be used only with JUMO digiLine-pH with VP plug connector and JUMO digiLine-T

Analog output of 4 to 20 mA (only with M12 plug connector, 8-pole)

Signal range	4 to 20 mA
Voltage supply	DC 12 to 30 V
Maximum load resistance	$R_b = (U_b - 2.5\ V) \div 0.022\ A$[a]
Accuracy	0.25 %
Ambient temperature influence	100 ppm/K

[a] Rb: Load resistance, Ub: Supply voltage

Digital input (only with M12 plug connector, 8-pole)

Signal type	Switching thresholds	
	On	Off
Potential-free contact	< 100 Ω	> 100 kΩ

JUMO GmbH & Co. KG
Delivery address: Mackenrodtstraße 14
36039 Fulda, Germany
Postal address: 36035 Fulda, Germany
Phone: +49 661 6003-0
Fax: +49 661 6003-607
Email: mail@jumo.net
Internet: www.jumo.net

JUMO Instrument Co. Ltd.
JUMO House
Temple Bank, Riverway
Harlow, Essex CM 20 2DY, UK
Phone: +44 1279 63 55 33
Fax: +44 1279 62 50 29
Email: sales@jumo.co.uk
Internet: www.jumo.co.uk

JUMO Process Control, Inc.
6733 Myers Road
East Syracuse, NY 13057, USA
Phone: +1 315 437 5866
Fax: +1 315 437 5860
Email: info.us@jumo.net
Internet: www.jumousa.com

Electrical data

Voltage supply[a]	SELV or PELV
digiLine mode	DC 4.2 to 5.5 V
2-wire transmitter mode (analog output of 4 to 20 mA)	DC 12 to 30 V
Power/current consumption	
digiLine mode	75 mW / 15 mA (at 5 V)
2-wire transmitter mode (analog output of 4 to 20 mA)	270 mW / 22 mA (at 12 V) 530 mW / 22 mA (at 24 V) 660 mW / 22 mA (at 30 V)
Electromagnetic compatibility (EMC)	DIN EN 61326-1
Interference emission	Class B
Interference immunity	Industrial requirements
Protection rating	Protection rating III

[a] The voltage supply for the digiLine bus must be rated as SELV or PELV.

Case

Ambient temperature	
5-pole device version (digiLine mode)	-10 to+120 °C
8-pole device version (2-wire transmitter mode)	-10 to +85 °C
Storage temperature	-10 to +85 °C
Resistance to climatic conditions	Relative humidity < 92% annual average, no condensation
Protection type	IP66 and IP67

JUMO GmbH & Co. KG
Delivery address: Mackenrodtstraße 14
36039 Fulda, Germany
Postal address: 36035 Fulda, Germany
Phone: +49 661 6003-0
Fax: +49 661 6003-607
Email: mail@jumo.net
Internet: www.jumo.net

JUMO Instrument Co. Ltd.
JUMO House
Temple Bank, Riverway
Harlow, Essex CM 20 2DY, UK
Phone: +44 1279 63 55 33
Fax: +44 1279 62 50 29
Email: sales@jumo.co.uk
Internet: www.jumo.co.uk

JUMO Process Control, Inc.
6733 Myers Road
East Syracuse, NY 13057, USA
Phone: +1 315 437 5866
Fax: +1 315 437 5860
Email: info.us@jumo.net
Internet: www.jumousa.com

Connection diagram

Variant with 5-pole M12 plug connector, A-coded

Pin	Potential	Symbol
1	+5 V (supply to digiLine electronics)	Connector
2	not connected	
3	GND	
4	RS485 B (RxD/TxD-)	
5	RS485 A (RxD/TxD+)	
The connection to the serial interface of a master with screw or spring-cage terminals is made with the aid of the JUMO digiLine device connection cable (see Accessories)		Socket

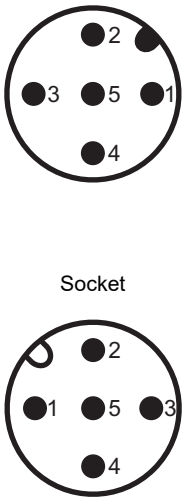

Variant with 8-pole M12 plug connector, A-coded

Pin	Potential	Plug connector symbol
1	+5 V (supplied only when connected to PC)[a]	Connector
2	Not used	
3	GND	
4	RS485 B (RxD/TxD-)	
5	RS485 A (RxD/TxD+)	
6	Digital input for potential-free contact to GND	
7	Analog output of 4 to 20 mA +[b]	
8	Analog output of 4 to 20 mA -[b]	
For connection as a 2-wire transmitter with a standard signal (4 to 20 mA), a connecting cable with 8-pole M12 cable socket must be provided by the customer.		Socket

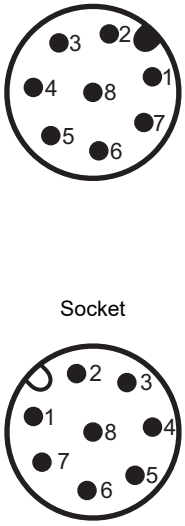

[a] The supply of DC 5 V is allowed only when connected to a PC for configuring with the JUMO DSM software, and is provided from the USB-RS485 interface.

[b] In the 2-wire transmitter mode, the transmitter is supplied solely via the current loop (pins 7 and 8). Refer to the appropriate connection examples. The voltage supply for the current loop must be galvanically isolated.

JUMO GmbH & Co. KG
Delivery address: Mackenrodtstraße 14
36039 Fulda, Germany
Postal address: 36035 Fulda, Germany
Phone: +49 661 6003-0
Fax: +49 661 6003-607
Email: mail@jumo.net
Internet: www.jumo.net

JUMO Instrument Co. Ltd.
JUMO House
Temple Bank, Riverway
Harlow, Essex CM 20 2DY, UK
Phone: +44 1279 63 55 33
Fax: +44 1279 62 50 29
Email: sales@jumo.co.uk
Internet: www.jumo.co.uk

JUMO Process Control, Inc.
6733 Myers Road
East Syracuse, NY 13057, USA
Phone: +1 315 437 5866
Fax: +1 315 437 5860
Email: info.us@jumo.net
Internet: www.jumousa.com

Galvanic isolation

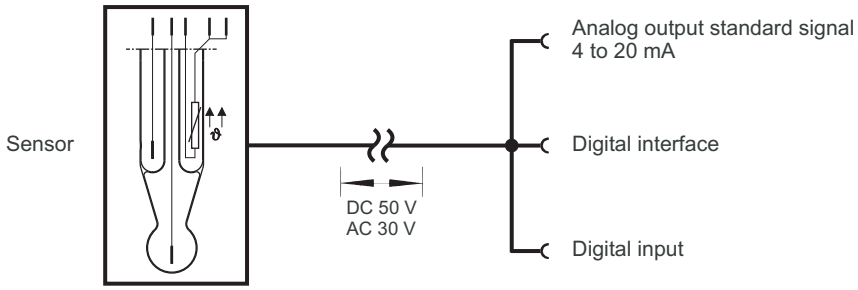

JUMO GmbH & Co. KG
Delivery address: Mackenrodtstraße 14
36039 Fulda, Germany
Postal address: 36035 Fulda, Germany
Phone: +49 661 6003-0
Fax: +49 661 6003-607
Email: mail@jumo.net
Internet: www.jumo.net

JUMO Instrument Co. Ltd.
JUMO House
Temple Bank, Riverway
Harlow, Essex CM 20 2DY, UK
Phone: +44 1279 63 55 33
Fax: +44 1279 62 50 29
Email: sales@jumo.co.uk
Internet: www.jumo.co.uk

JUMO Process Control, Inc.
6733 Myers Road
East Syracuse, NY 13057, USA
Phone: +1 315 437 5866
Fax: +1 315 437 5860
Email: info.us@jumo.net
Internet: www.jumousa.com

Connection examples

JUMO digiLine mode

The installation example of a neutralization system is displayed. 3 sensors (pH, ORP, and temperature) with JUMO digiLine electronics are connected to a JUMO AQUIS touch S. JUMO Y-splitters are used to attach the connections on the sensors to the JUMO digiLine electronics. Appropriate fittings are available from JUMO for mounting the sensors.

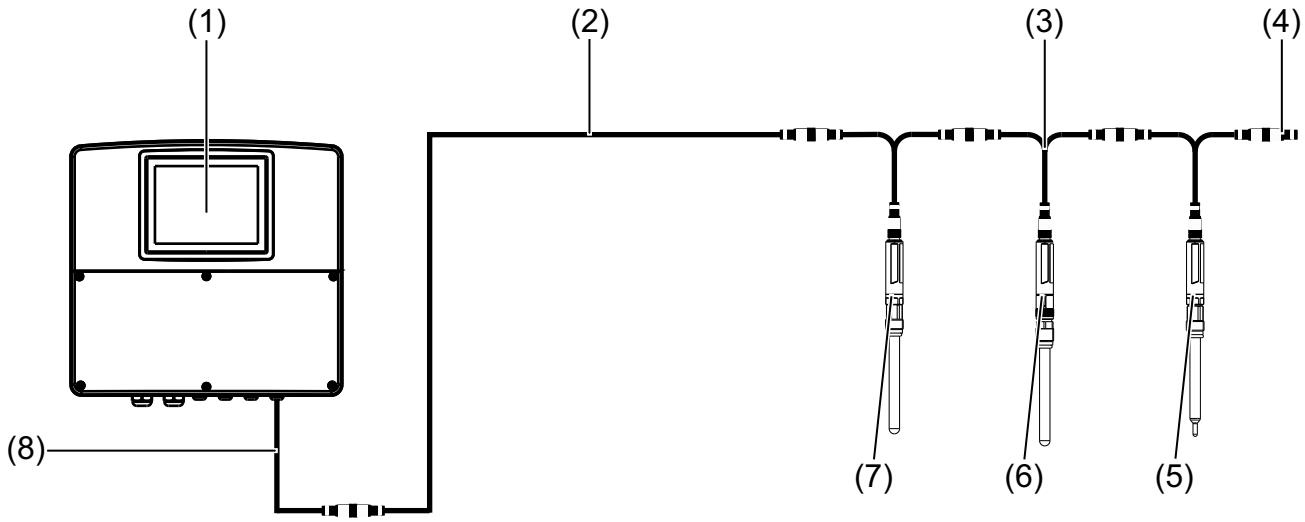

(1) JUMO AQUIS touch S with RS485 bus terminator in the device

(2) JUMO M12 connecting cable, 5-pole and A-coded;
the required total line length between master and sensors can be achieved by combining several M12 connecting cables. When planning the line lengths, heed the information regarding cable planning in the Annex of the operating manual for the JUMO AQUIS touch S/P.

(3) JUMO Y-splitter, 5-pole with 2× M12 cable sockets and 1× M12 connector, each of which is A-coded

(4) JUMO M12 terminating connector, 5-pole for bus termination

(5) JUMO compensation thermometer with 5-pole JUMO digiLine electronics
Order example: Compensation thermometer 201085/89-1005-21-120 with
JUMO digiLine-T: 202705/30/86-530

(6) JUMO pH sensor with 5-pole JUMO digiLine electronics
Order example: pH sensor 201021/10/12-04-22-120/000 with
JUMO digiLine pH: 202705/10/86-530

(7) JUMO redox sensor with 5-pole JUMO digiLine electronics
Order example: redox sensor 201026/10/22-04-22-120 with
JUMO digiLine-ORP: 202705/20/86-530

(8) JUMO digiLine master connecting cable with exposed wire ends at one end for connection to devices with screw or spring-cage terminals (see Accessories); connection is described in the operating manual of the JUMO AQUIS touch S/P.

JUMO GmbH & Co. KG
Delivery address: Mackenrodtstraße 14
36039 Fulda, Germany
Postal address: 36035 Fulda, Germany
Phone: +49 661 6003-0
Fax: +49 661 6003-607
Email: mail@jumo.net
Internet: www.jumo.net

JUMO Instrument Co. Ltd.
JUMO House
Temple Bank, Riverway
Harlow, Essex CM 20 2DY, UK
Phone: +44 1279 63 55 33
Fax: +44 1279 62 50 29
Email: sales@jumo.co.uk
Internet: www.jumo.co.uk

JUMO Process Control, Inc.
6733 Myers Road
East Syracuse, NY 13057, USA
Phone: +1 315 437 5866
Fax: +1 315 437 5860
Email: info.us@jumo.net
Internet: www.jumousa.com

Modbus mode

The figure shows the connection of 2 sensors with JUMO digiLine electronics with 5-pole M12 plug connection on a JUMO mTRON T as the Modbus master. Up to 31 digital sensors per RS485 interface can be integrated. Optionally, a JUMO mTRON T central processing unit can be equipped with up to 2 RS485 interfaces (see order data for JUMO mTRON T).

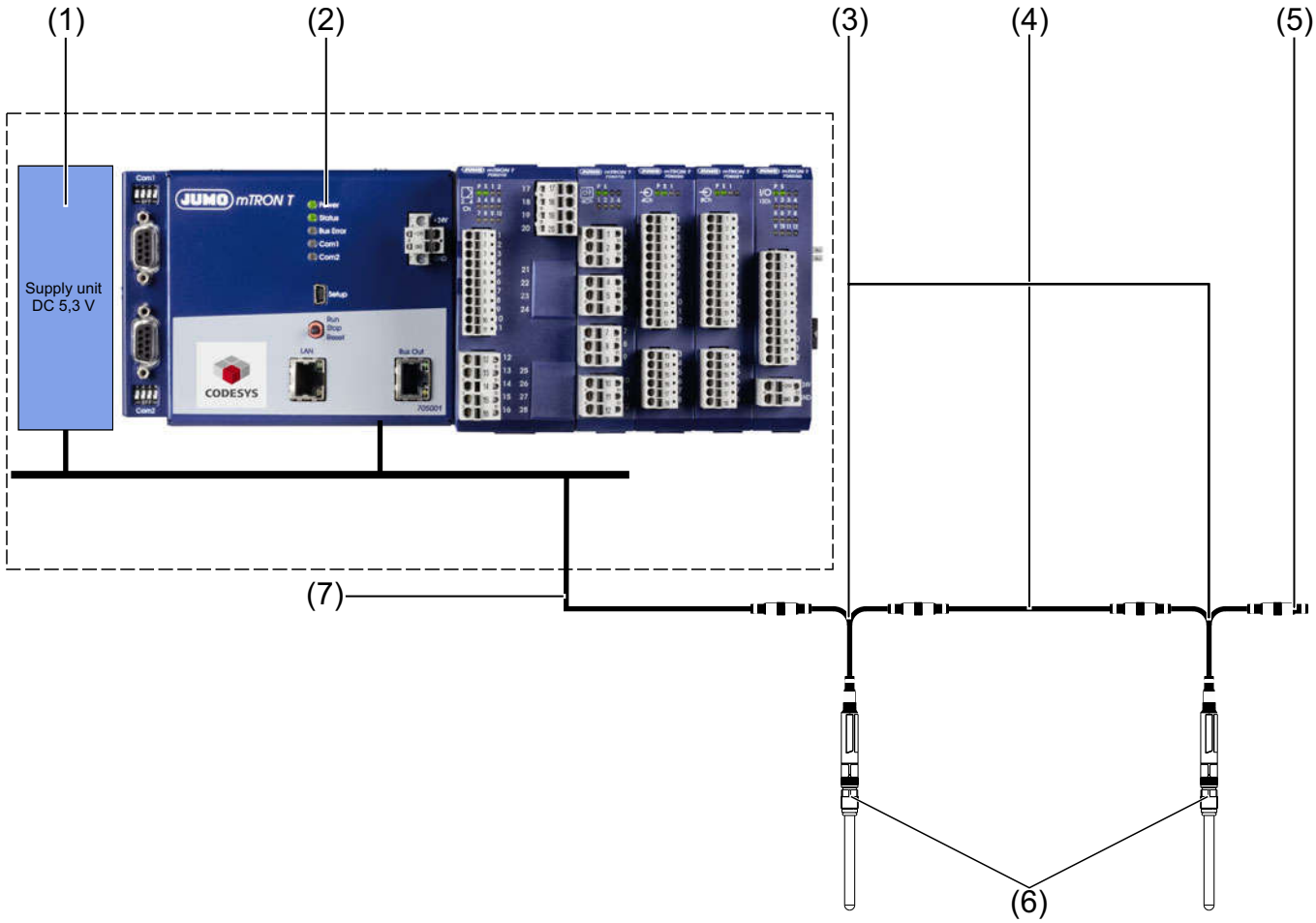

(1) Stabilized power supply unit with DC 5.3 V output for feeding the digital sensors
(2) JUMO mTRON T central processing unit with activated PLC function and RS422/485 Modbus RTU (see order data for JUMO mTRON T)
(3) JUMO Y-splitter, 5-pole with 2× M12 cable sockets and 1× M12 connector, each of which is A-coded
(4) JUMO M12 connecting cable, 5-pole and A-coded
(5) JUMO M12 terminating connector, 5-pole for bus termination
(6) JUMO sensors with 5-pole JUMO digiLine electronics
(7) JUMO digiLine master connecting cable with open wire ends at one end for connection to devices with screw or spring-cage terminals (see Accessories); for connection to the Modbus system, refer to the wiring diagram in the following.

JUMO GmbH & Co. KG
Delivery address: Mackenrodtstraße 14
36039 Fulda, Germany
Postal address: 36035 Fulda, Germany
Phone: +49 661 6003-0
Fax: +49 661 6003-607
Email: mail@jumo.net
Internet: www.jumo.net

JUMO Instrument Co. Ltd.
JUMO House
Temple Bank, Riverway
Harlow, Essex CM 20 2DY, UK
Phone: +44 1279 63 55 33
Fax: +44 1279 62 50 29
Email: sales@jumo.co.uk
Internet: www.jumo.co.uk

JUMO Process Control, Inc.
6733 Myers Road
East Syracuse, NY 13057, USA
Phone: +1 315 437 5866
Fax: +1 315 437 5860
Email: info.us@jumo.net
Internet: www.jumousa.com

Wiring diagram for Modbus mode

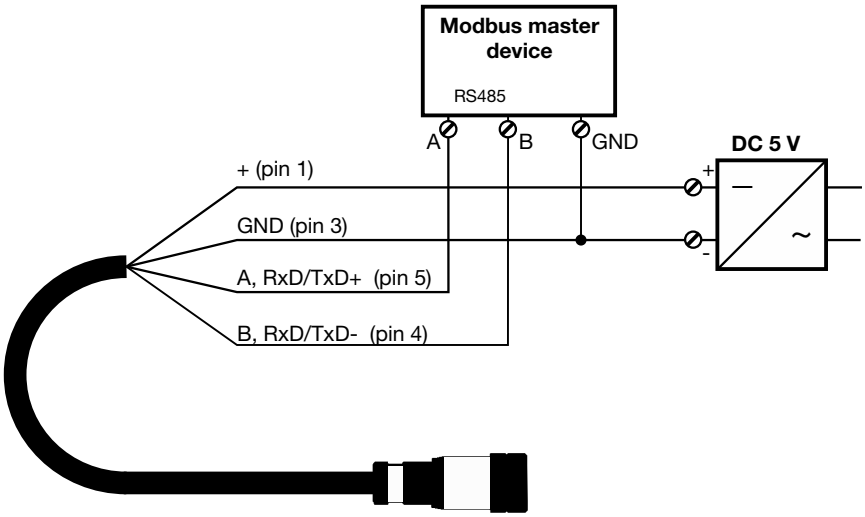

JUMO GmbH & Co. KG
Delivery address: Mackenrodtstraße 14
36039 Fulda, Germany
Postal address: 36035 Fulda, Germany
Phone: +49 661 6003-0
Fax: +49 661 6003-607
Email: mail@jumo.net
Internet: www.jumo.net

JUMO Instrument Co. Ltd.
JUMO House
Temple Bank, Riverway
Harlow, Essex CM 20 2DY, UK
Phone: +44 1279 63 55 33
Fax: +44 1279 62 50 29
Email: sales@jumo.co.uk
Internet: www.jumo.co.uk

JUMO Process Control, Inc.
6733 Myers Road
East Syracuse, NY 13057, USA
Phone: +1 315 437 5866
Fax: +1 315 437 5860
Email: info.us@jumo.net
Internet: www.jumousa.com

8-pole version for operation with 2-wire transmitter (standard signal 4 to 20 mA)

The figure shows the connection of 1 sensor with JUMO digiLine electronics with 8-pole M12 plug connector on a measuring or automation device as 2-wire transmitter with standard signal of 4 to 20 mA. In addition a potential-free contact, in the receiving automation device, which controls activation of the hold function or selection of the function of the analog output via the digital input on the JUMO digiLine electronics. In this way, it is possible to toggle the measured value, e. g. with a PLC. The 8-pole device version is intended primarily for use as a 2-wire transmitter with standard signal of 4 to 20 mA.

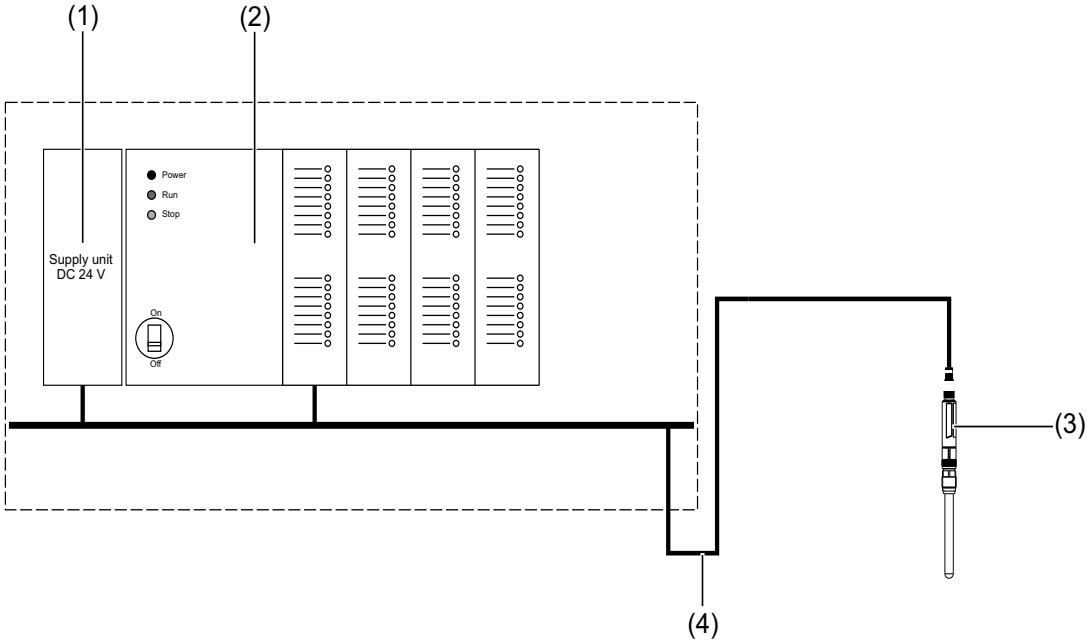

(1) Stabilized power supply unit with DC 24 V output to supply the automation system and the current loop (standard signal of 4 to 20 mA) and the JUMO digiLine electronics

(2) Measuring or automation device with analog input for the standard signal of 4 to 20 mA and control contact for toggling the measured value in the JUMO digiLine electronics of the sensor; the current loop for the standard signal must be supplied with an output voltage of DC 12 to 30 V by a stabilized power supply unit.

(3) JUMO sensor with 8-pole JUMO digiLine electronics

(4) Customer-provided connecting cable with 8-pole M12 cable socket for connecting to the JUMO digiLine electronics; for the connector assignment, refer to the wiring diagram in the following.

JUMO GmbH & Co. KG
Delivery address: Mackenrodtstraße 14
36039 Fulda, Germany
Postal address: 36035 Fulda, Germany
Phone: +49 661 6003-0
Fax: +49 661 6003-607
Email: mail@jumo.net
Internet: www.jumo.net

JUMO Instrument Co. Ltd.
JUMO House
Temple Bank, Riverway
Harlow, Essex CM 20 2DY, UK
Phone: +44 1279 63 55 33
Fax: +44 1279 62 50 29
Email: sales@jumo.co.uk
Internet: www.jumo.co.uk

JUMO Process Control, Inc.
6733 Myers Road
East Syracuse, NY 13057, USA
Phone: +1 315 437 5866
Fax: +1 315 437 5860
Email: info.us@jumo.net
Internet: www.jumousa.com

Wiring diagram for 2-wire transmitter mode

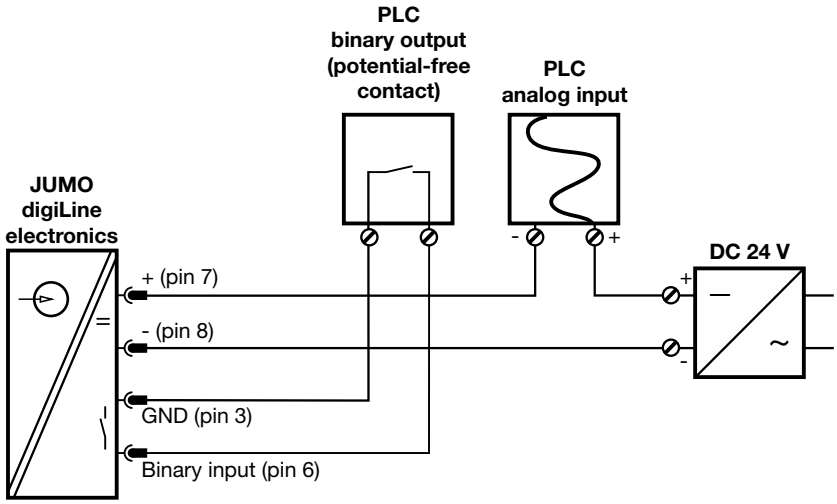

JUMO GmbH & Co. KG
Delivery address: Mackenrodtstraße 14
36039 Fulda, Germany
Postal address: 36035 Fulda, Germany
Phone: +49 661 6003-0
Fax: +49 661 6003-607
Email: mail@jumo.net
Internet: www.jumo.net

JUMO Instrument Co. Ltd.
JUMO House
Temple Bank, Riverway
Harlow, Essex CM 20 2DY, UK
Phone: +44 1279 63 55 33
Fax: +44 1279 62 50 29
Email: sales@jumo.co.uk
Internet: www.jumo.co.uk

JUMO Process Control, Inc.
6733 Myers Road
East Syracuse, NY 13057, USA
Phone: +1 315 437 5866
Fax: +1 315 437 5860
Email: info.us@jumo.net
Internet: www.jumousa.com

Dimensions

The following dimensioned drawings give the dimensions of sensors with JUMO digiLine electronics. The insertion length varies and depends on the type of sensor to which the digiLine electronics are connected.

Dimensions of sensor with JUMO digiLine electronics with Variopin connection

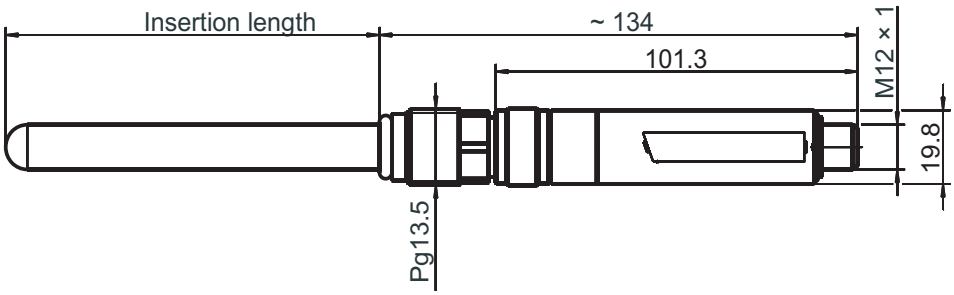

Dimensions of sensor with JUMO digiLine electronics with N-connection

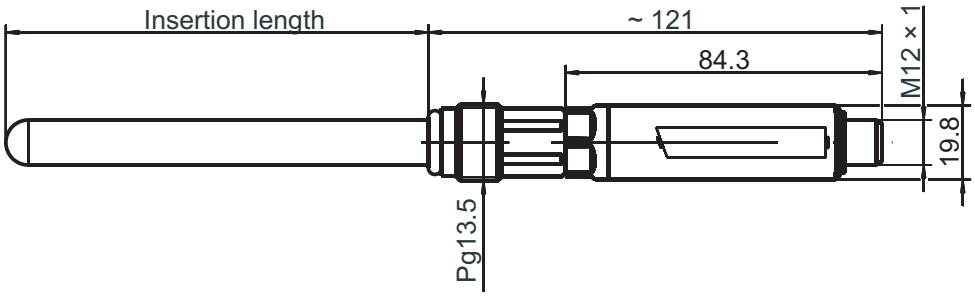

JUMO GmbH & Co. KG
Delivery address: Mackenrodtstraße 14
36039 Fulda, Germany
Postal address: 36035 Fulda, Germany
Phone: +49 661 6003-0
Fax: +49 661 6003-607
Email: mail@jumo.net
Internet: www.jumo.net

JUMO Instrument Co. Ltd.
JUMO House
Temple Bank, Riverway
Harlow, Essex CM 20 2DY, UK
Phone: +44 1279 63 55 33
Fax: +44 1279 62 50 29
Email: sales@jumo.co.uk
Internet: www.jumo.co.uk

JUMO Process Control, Inc.
6733 Myers Road
East Syracuse, NY 13057, USA
Phone: +1 315 437 5866
Fax: +1 315 437 5860
Email: info.us@jumo.net
Internet: www.jumousa.com

Examples of installation in a flow fitting

N-connection

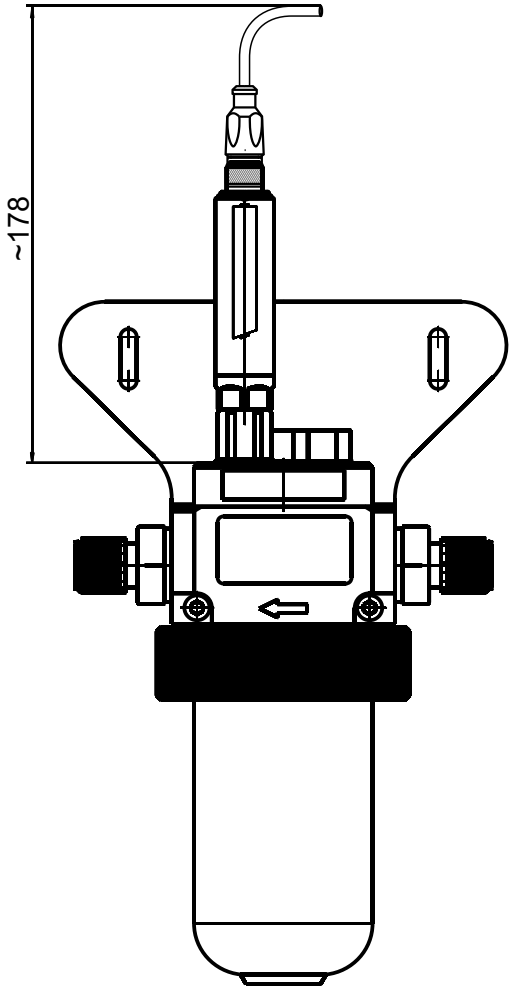

Variopin

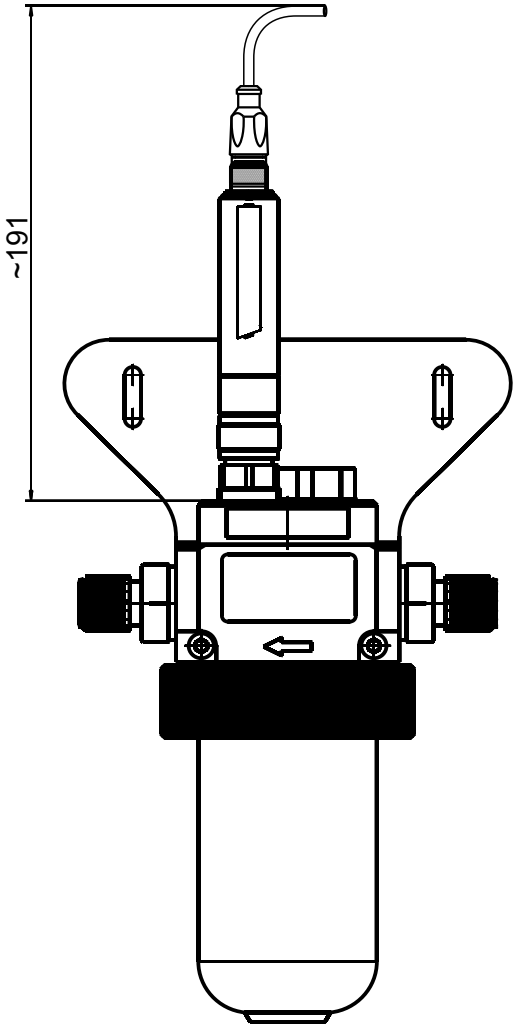

JUMO GmbH & Co. KG
Delivery address: Mackenrodtstraße 14
36039 Fulda, Germany
Postal address: 36035 Fulda, Germany
Phone: +49 661 6003-0
Fax: +49 661 6003-607
Email: mail@jumo.net
Internet: www.jumo.net

JUMO Instrument Co. Ltd.
JUMO House
Temple Bank, Riverway
Harlow, Essex CM 20 2DY, UK
Phone: +44 1279 63 55 33
Fax: +44 1279 62 50 29
Email: sales@jumo.co.uk
Internet: www.jumo.co.uk

JUMO Process Control, Inc.
6733 Myers Road
East Syracuse, NY 13057, USA
Phone: +1 315 437 5866
Fax: +1 315 437 5860
Email: info.us@jumo.net
Internet: www.jumousa.com

Order details

	(1)	**Basic type**
202705/10		JUMO digiLine pH value, temperature
202705/20		JUMO digiLine redox
202705/30		JUMO digiLine temperature
	(2)	Electrical connection input
86		Cable socket N
90		VP socket
	(3)	Output
530		RS-485 Modbus
888		Actual value output, configurable

	(1)		**(2)**		**(3)**
Order code		-		-	
Order example	202705/10	-	90	-	530

JUMO GmbH & Co. KG
Delivery address: Mackenrodtstraße 14
36039 Fulda, Germany
Postal address: 36035 Fulda, Germany
Phone: +49 661 6003-0
Fax: +49 661 6003-607
Email: mail@jumo.net
Internet: www.jumo.net

JUMO Instrument Co. Ltd.
JUMO House
Temple Bank, Riverway
Harlow, Essex CM 20 2DY, UK
Phone: +44 1279 63 55 33
Fax: +44 1279 62 50 29
Email: sales@jumo.co.uk
Internet: www.jumo.co.uk

JUMO Process Control, Inc.
6733 Myers Road
East Syracuse, NY 13057, USA
Phone: +1 315 437 5866
Fax: +1 315 437 5860
Email: info.us@jumo.net
Internet: www.jumousa.com

Accessories

Accessories

Basic type	Part no.
JUMO M12 digiLine master connecting cable[a] 5-pole, A-coded, 10 m long	00638341
JUMO M12-digiLine master connecting cable[a] 5-pole, A-coded 5 m long	00638337
JUMO M12-digiLine master connecting cable[a] 5-pole, A-coded 1.5 m long	00638333
JUMO M12 connecting cable 5-pole 15 m	00638324
JUMO M12 connecting cable 5-pole 10 m	00638322
JUMO M12 connecting cable 5-pole 5 m	00638315
JUMO M12 connecting cable 5-pole 1.5 m	00638313
JUMO M12 connecting cable 5-pole 0.5 m	00638312
JUMO Y-splitter 5-pole	00638327
JUMO digiLine hub	00646871
JUMO power supply unit for JUMO digiLine hub	00661597
JUMO M12 terminating connector	00461591
JUMO M12 adapter cable 8-pole socket to 5-pole connector, A-coded	00638325
M12 cable socket, 8-pole	00444312
M12 cable socket, 8-pole, shielded	00486503
digiLine USB-RS485 interface	00638346
JUMO DSM software (**D**igital **S**ensor **M**anagement)	00655787

[a] For connection to masters with screw or spring-cage terminals; prepare one end of the cable with a 5-pole M12 plug and the other end with ferrules.