TIMKEN

The Timken Company
4500 Mt Pleasant St. NW
N. Canton, OH 44720
Phone: (234) 262-3000
E-Mail: CustomerCAD@timken.com • **Web site:** www.timken.com

Timken Part Number HM804846 - HM804810, Tapered Roller Bearings - TS (Tapered Single) Imperial

This is the most basic and most widely used type of tapered roller bearing. It consists of two main separable parts: the cone (inner ring) assembly and the cup (outer ring). It is typically mounted in opposing pairs on a shaft.



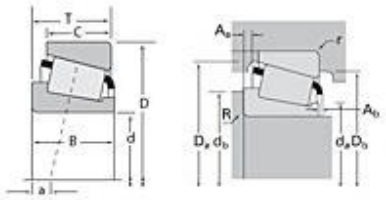

Specifications | Dimensions | Abutment and Fillet Dimensions | Basic Load Ratings | Factors

Specifications

Series	HM804800
Cone Part Number	HM804846
Cup Part Number	HM804810
Design Units	Imperial
Bearing Weight	2.10 lb 1.000 Kg
Cage Type	Stamped Steel

Dimensions

d - Bore	1.8750 in 47.625 mm
D - Cup Outer Diameter	3.7500 in 95.250 mm

B - Cone Width	1.1563 in 29.370 mm
C - Cup Width	0.9063 in 23.020 mm
T - Bearing Width	1.1875 in 30.163 mm

Abutment and Fillet Dimensions

R - Cone Backface "To Clear" Radius[1]	0.14 in 3.560 mm
r - Cup Backface "To Clear" Radius[2]	0.130 in 3.30 mm
da - Cone Frontface Backing Diameter	2.26 in 57.40 mm
db - Cone Backface Backing Diameter	2.60 in 66.04 mm
Da - Cup Frontface Backing Diameter	3.62 in 91.90 mm
Db - Cup Backface Backing Diameter	3.19 in 81.03 mm
Ab - Cage-Cone Frontface Clearance	0.14 in 3.6 mm
Aa - Cage-Cone Backface Clearance	0.03 in 0.8 mm
a - Effective Center Location[3]	-0.15 in -3.80 mm

Basic Load Ratings

C90 - Dynamic Radial Rating (90 million revolutions)[4]	8590 lbf 38200 N
C1 - Dynamic Radial Rating (1 million revolutions)[5]	33100 lbf 147000 N
C0 - Static Radial Rating	35400 lbf 157000 N
C_{a90} - Dynamic Thrust Rating (90 million revolutions)[6]	8030 lbf 35700 N

Factors

K - Factor[7]	1.07
e - ISO Factor[8]	0.55
Y - ISO Factor[9]	1.1
G1 - Heat Generation Factor (Roller-Raceway)	44.8
G2 - Heat Generation Factor (Rib-Roller End)	14.6
Cg - Geometry Factor	0.102

[1] These maximum fillet radii will be cleared by the bearing corners.
[2] These maximum fillet radii will be cleared by the bearing corners.
[3] Negative value indicates effective center inside cone backface.
[4] Based on 90 x 10^6 revolutions L_{10} life, for The Timken Company life calculation method. C_{90} and C_{a90} are radial and thrust values.
[5] Based on 1 x 10^6 revolutions L_{10} life, for the ISO life calculation method.
[6] Based on 90 x 10^6 revolutions L_{10} life, for The Timken Company life calculation method. C_{90} and C_{a90} are radial and thrust values for a single-row, $C_{90(2)}$ is the two-row radial value.
[7] These factors apply for both inch and metric calculations. Consult your Timken representative for instruction on use.
[8] These factors apply for both inch and metric calculations. Consult your Timken representative for instruction on use.
[9] These factors apply for both inch and metric calculations. Consult your Timken representative for instruction on use.

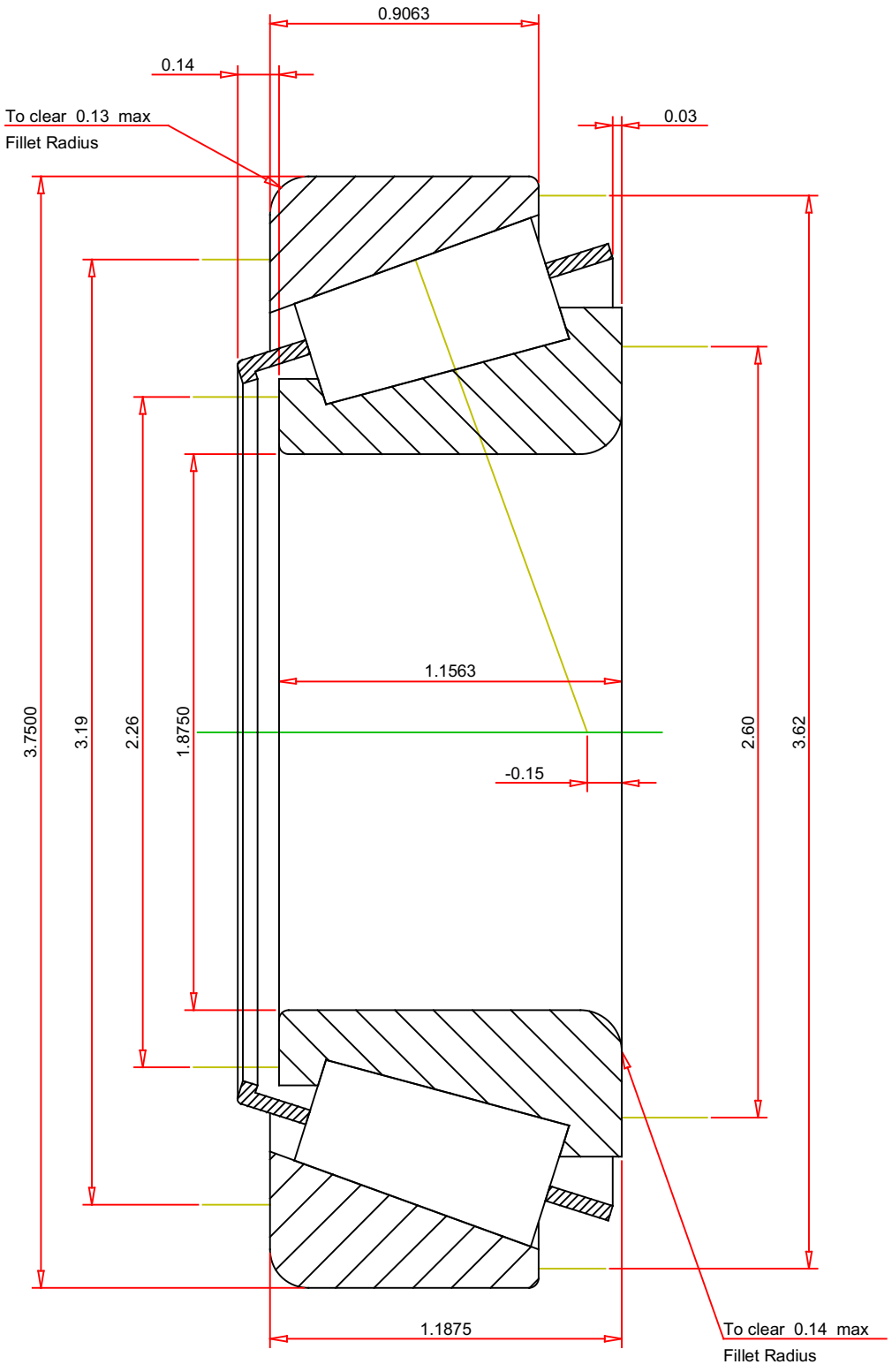

IMPERIAL UNITS

ISO Factor - e	0.55	
ISO Factor - Y	1.1	
Bearing Weight	2.1	lb
Number of Rollers Per Row	18	
Effective Center Location	-0.15	inch

TIMKEN®

THE TIMKEN COMPANY
NORTH CANTON, OHIO USA

HM804846 - HM804810
TS BEARING ASSEMBLY

K Factor	1.07	
Dynamic Radial Rating - C90	8590	lbf
Dynamic Thrust Rating - Ca90	8030	lbf
Static Radial Rating - C0	35400	lbf
Dynamic Radial Rating - C1	33100	lbf

Every reasonable effort has been made to ensure the accuracy of the information contained in this writing, but no liability is accepted for errors, omissions or for any other reason.

FOR DISCUSSION ONLY