Pressure transmitter
For industrial applications
Model A-10

for further approvals,
see page 9

Applications

- Machine building
- Measurement and control technology
- Hydraulics and pneumatics
- Pumps and compressors
- Shipbuilding

Special features

- Excellent quality and proven technology
- Exceptionally large variety covers almost all applications
- All configurable variants are available at short notice from quantities of 1 upwards
- Particularly cost-efficient



Pressure transmitter, model A-10

Description

The field-proven model A-10 pressure transmitter (pressure sensor) is the all-rounder for pressure measurement in industrial environments. Compactly built, it can be integrated into a wide range of machine designs. The many measuring ranges, and special measuring ranges, contribute to its universal applicability.

Excellent quality and proven technology
Our many years of experience and precise knowledge of customer needs have been incorporated into the development of the model A-10. It has been proving itself in countless applications for over ten years. The consistently high quality and its reliable function are appreciated worldwide and regularly confirmed by both internal and external audits. This bestseller can tolerate up to 100 million load cycles with almost constant precision.

Exceptionally large variety covers almost all applications
Depending on the requirement, the model A-10 measures gauge pressure, vacuum and absolute pressure. It can be flexibly configured into over 2 million variants and can thus be effortlessly integrated into almost any plant concept.

All configurable variants are available at short notice from quantities of 1 upwards
Every custom-configured model A-10 will be ready for shipment, starting from a batch size of 1, no later than five working days after the order is placed. Large quantities can also be delivered quickly. The short delivery times help both OEMs to meet short production times and distributors to procure the right product for their customers quickly.

Particularly cost-efficient
The model A-10 is particularly cost-efficient and offers very good performance, matched to the majority of applications in terms of precision and robustness. The high reliability and long service life ensure low maintenance and replacement costs.

Data sheets showing similar products:
High-quality pressure transmitter for general industrial applications; model S-20; see data sheet PE 81.61
Pressure sensor with IO-Link; model A-1200; see data sheet PE 81.90

WIKA
Part of your business

Specifications

Optionally the model A-10 is available with an improved non-linearity. Depending on the selected non-linearity the following values result:

Accuracy specifications	Non-linearity ≤ ±0.5 % of span	Non-linearity ≤ ±0.25 % of span
Non-linearity per BFSL per IEC 61298-2		
Measuring range ≤ 0.1 bar [≤ 1.45 psi]	≤ ±0.5 % of span	-
Measuring range > 0.1 bar [> 1.45 psi]	≤ ±0.5 % of span	≤ ±0.25 % of span [1]
Accuracy	→ See “Max. measured error per IEC 61298-2”	
Max. measured error per IEC 61298-2		
Measuring range ≥ 0.6 bar [≥ 8.7 psi]	≤ ±1 % of span	≤ ±0.5 % of span
Measuring range ≥ 0.4 bar [≥ 5.8 psi]	≤ ±1.2 % of span	≤ ±0.7 % of span
Measuring range ≥ 0.25 bar [≥ 3.6 psi]	≤ ±1.3 % of span	≤ ±0.8 % of span
Measuring range ≥ 0.16 bar [≥ 2.3 psi]	≤ ±1.5 % of span	≤ ±1 % of span
Measuring range ≥ 0.1 bar [≥ 1.45 psi]	≤ ±1.8 % of span	-
Measuring range ≥ 0.05 bar [≥ 0.73 psi]	≤ ±2.4 % of span	-
Zero point error [2] [3]		
4 ... 20 mA / DC 1 ... 5 V / DC 0.5 ... 4.5 V / DC 0.5 ... 4.5 V ratiometric	≤ ±0.3 % of span	≤ ±0.2 % of span
DC 0 ... 10 V	≤ ±0.5 % of span	≤ ±0.4 % of span
DC 0 ... 5 V [4]	≤ ±0.6 % of span	-

1) Not possible with output signal DC 0 ... 5 V.
2) Measuring ranges ≤ 0.1 bar [≤ 1.45 psi] (or equivalent) only possible with ≤ ±0.5 % of span.
3) Outside reference conditions, add the temperature hysteresis for measuring ranges < 0.6 bar [< 8.7 psi].
4) Not possible with measuring ranges ≤ 0.1 bar [≤ 1.45 psi] (or equivalent).

In case of occasional faults due to electrostatic discharges, a temporary additional measured error of up to ±2.5 % can occur.

Further details on: Accuracy specifications		
Signal noise	≤ ±0.2 % of span	
Non-repeatability per IEC 61298-2		
Measuring range ≤ 0.1 bar [≤ 1.45 psi]	≤ 0.2 % of span	
Measuring range > 0.1 bar [> 1.45 psi]	≤ 0.1 % of span	
Temperature error at 0 ... 80 °C [32 ... 176 °F]		
Typical	≤ ±1 % of span	
Maximum	■ ≤ ±2.5 % of span ■ ≤ ±1.5 % of span on request	
Temperature hysteresis -30 ... +100°C [-22 ... +212 °F] for measuring ranges < 0.6 bar [< 8.7 psi]		
Measuring range < 0.6 bar [< 8.7 psi]	Gauge pressure	≤ ±0.2 % of span
	Absolute pressure	≤ ±0.2 % of span
Measuring range < 0.4 bar [< 5.8 psi]	Gauge pressure	≤ ±0.3 % of span
	Absolute pressure	≤ ±0.3 % of span
Measuring range < 0.25 bar [< 3.6 psi]	Gauge pressure	≤ ±0.5 % of span
	Absolute pressure	≤ ±0.5 % of span
Measuring range < 0.16 bar [< 2.3 psi]	Gauge pressure	≤ ±0.7 % of span
	Absolute pressure	≤ ±0.8 % of span
Measuring range < 0.1 bar [< 1.45 psi]	Gauge pressure	≤ ±1.4 % of span

Further details on: Accuracy specifications	
Long-term drift per IEC 61298-2	
Measuring ranges ≤ 0.1 bar [≤ 1.45 psi]	≤ ±0.5 % of span [1]
Measuring ranges ≤ 0.4 bar [≤ 5.8 psi]	≤ ±0.2 % of span
Measuring ranges > 0.4 bar [> 5.8 psi]	≤ ±0.1 % of span
Additional zero point error depending on the mounting position for measuring ranges ≤ 1 bar [15 psi]	
Mounting position 180°, vertical, top process connection	≤ 1 mbar [≤ 0.015 psi]
Mounting position 90°, horizontal	≤ 0.6 mbar [≤ 0.009 psi]
Reference conditions	Per IEC 61298-1

1) Outside reference conditions the temperature hysteresis has to be added for measuring ranges ≤ 0.1 bar [≤ 1.45 psi].

Measuring ranges, gauge pressure

bar	
0 ... 0.05	0 ... 10 [1]
0 ... 0.1	0 ... 16 [1]
0 ... 0.16	0 ... 25 [1]
0 ... 0.25	0 ... 40
0 ... 0.4	0 ... 60
0 ... 0.6	0 ... 100
0 ... 1	0 ... 160
0 ... 1.6	0 ... 250
0 ... 2.5	0 ... 400
0 ... 4	0 ... 600
0 ... 6	0 ... 1,000

1) If the medium water is measured, a higher overpressure limit is recommended.

psi	
0 ... 1	0 ... 300 [1]
0 ... 5	0 ... 500
0 ... 15	0 ... 1,000
0 ... 25	0 ... 1,500
0 ... 30	0 ... 2,000
0 ... 50	0 ... 3,000
0 ... 100	0 ... 5,000
0 ... 160 [1]	0 ... 10,000
0 ... 200 [1]	0 ... 15,000

1) If the medium water is measured, a higher overpressure limit is recommended.

inWC	
0 ... 20	0 ... 120
0 ... 40	0 ... 150
0 ... 60	0 ... 200
0 ... 80	0 ... 250
0 ... 100	0 ... 400

Measuring ranges, absolute pressure

bar abs.	
0 ... 0.1	0 ... 2.5
0 ... 0.16	0 ... 4
0 ... 0.25	0 ... 6
0 ... 0.4	0 ... 10
0 ... 0.6	0 ... 16
0 ... 1	0 ... 25
0 ... 1.6	

psi abs.	
0 ... 5	0 ... 100
0 ... 15	0 ... 150
0 ... 25	0 ... 200
0 ... 30	0 ... 300
0 ... 50	

inWC abs.	
0 ... 40	0 ... 150
0 ... 60	0 ... 200
0 ... 80	0 ... 250
0 ... 100	0 ... 400
0 ... 120	

Vacuum and +/- measuring ranges

bar	
-0.025 ... +0.025	-0.3 ... +0.3
-0.05 ... 0	-0.4 ... 0
-0.05 ... +0.05	-0.5 ... +0.5
-0.05 ... +0.15	-0.6 ... 0
-0.05 ... +0.2	-1 ... 0
-0.05 ... +0.25	-1 ... +0.6
-0.1 ... 0	-1 ... +1.5
-0.1 ... +0.1	-1 ... +3
-0.15 ... +0.15	-1 ... +5
-0.16 ... 0	-1 ... +9 [1]
-0.2 ... +0.2	-1 ... +15 [1]
-0.25 ... 0	-1 ... +24 [1]

1) If the medium water is measured, a higher overpressure limit is recommended.

psi	
-1 ... 0	-30 inHg ... +100
-30 inHg ... 0	-30 inHg ... +160 [1]
-30 inHg ... +15	-30 inHg ... +200 [1]
-30 inHg ... +30	-30 inHg ... +300 [1]
-30 inHg ... +60	

1) If the medium water is measured, a higher overpressure limit is recommended.

inWC	
-10 ... +10	-80 ... 0
-20 ... 0	-100 ... 0
-20 ... +20	-100 ... +100
-40 ... 0	-120 ... 0
-40 ... +40	-125 ... +125
-50 ... +50	-150 ... 0
-60 ... 0	-200 ... +200
-75 ... +75	-250 ... 0

Other measuring ranges on request.

Further details on: Measuring range		
Units	bar, psi, inWC, mbar, kg/cm², MPa, kPa	
Maximum operating pressure	→ Corresponds to the upper measuring range value / measuring range full scale value	
Overpressure limit [1]	The overpressure limit is based on the measuring range. Depending on the selected process connection and sealing, restrictions in overpressure limit can result.	
bar	Measuring ranges ≤ 0.1 bar	0.2 bar
	Measuring ranges ≤ 0.4 bar	1 bar
	Measuring ranges < 1.6 bar	3 bar
	Measuring ranges ≥ 1.6 bar	2 times
	Measuring range 1,000 bar	1.43 times
bar abs.	Measuring ranges ≤ 0.4 bar abs.	1 bar abs.
	Measuring ranges < 1.6 bar abs.	3 bar abs.
	Measuring ranges ≥ 1.6 bar abs.	2 times
psi	Measuring ranges ≤ 1 psi	3 psi
	Measuring ranges ≤ 5 psi	14.5 psi
	Measuring ranges < 25 psi	45 psi
	Measuring ranges ≥ 25 psi	2 times
	Measuring ranges 160 psi, 1,000 psi, 1,500 psi and 10,000 psi	1.7 times
	Measuring range 15,000 psi	1.43 times
psi abs.	Measuring ranges ≤ 5 psi abs.	14.5 psi abs.
	Measuring ranges < 25 psi abs.	45 psi abs.
	Measuring ranges ≥ 25 psi abs.	2 times
inWC	Measuring ranges ≤ 40 inWC	80 inWC
	Measuring ranges ≤ 200 inWC	400 inWC
	Measuring ranges ≤ 400 inWC	1,200 inWC

Further details on: Measuring range		
inWC abs.	Measuring ranges ≤ 200 inWC abs.	400 inWC abs.
	Measuring ranges ≤ 400 inWC abs.	1,200 inWC abs.
Vacuum resistance	Yes (restriction with measuring ranges ≤ 0.1 bar [≤ 1 psi, ≤ 40 inWC]: -0.2 bar [-3 psi, -80 inWC])	

1) 3-fold overpressure limit on request.

Process connection				
Standard	**Thread size**	**Max. measuring range**	**Overpressure limit**	**Sealing**
EN 837	G ⅛ B	400 bar [5,800 psi]	572 bar [8,290 psi]	Copper
	G ¼ B	1,000 bar [15,000 psi]	1,480 bar [21,400 psi]	■ Copper ■ Stainless steel
	G ¼ female thread	1,000 bar [15,000 psi]	1,480 bar [21,400 psi]	Without
	G ⅜ B	1,000 bar [15,000 psi]	1,480 bar [21,400 psi]	■ Copper ■ Stainless steel
	G ½ B	1,000 bar [15,000 psi]	1,480 bar [21,400 psi]	■ Copper ■ Stainless steel
DIN EN ISO 1179-2 (formerly DIN 3852-E)	G ¼ A	600 bar [8,700 psi]	858 bar [12,440 psi]	■ NBR ■ EPDM
		1,000 bar [15,000 psi]	1,480 bar [21,400 psi]	FPM/FKM
	G ½ A	600 bar [8,700 psi]	858 bar [12,440 psi]	■ NBR ■ FPM/FKM
DIN EN ISO 9974-2 (formerly DIN 3852-E)	M14 x 1.5	600 bar [8,700 psi]	858 bar [12,440 psi]	■ NBR ■ FPM/FKM ■ EPDM
ANSI/ASME B1.20.1	⅛ NPT	400 bar [5,800 psi]	572 bar [8,290 psi]	-
	¼ NPT	1,000 bar [15,000 psi]	1,480 bar [21,400 psi]	
	¼ NPT female thread	1,000 bar [15,000 psi]	1,480 bar [21,400 psi]	
	½ NPT	1,000 bar [15,000 psi]	1,480 bar [21,400 psi]	
DIN 16288	M20 x 1.5	1,000 bar [15,000 psi]	1,480 bar [21,400 psi]	■ Copper ■ Stainless steel
ISO 7	R ¼	1,000 bar [15,000 psi]	1,480 bar [21,400 psi]	-
	R ⅜	1,000 bar [15,000 psi]	1,480 bar [21,400 psi]	
	R ½	1,000 bar [15,000 psi]	1,480 bar [21,400 psi]	
KS	PT ¼	1,000 bar [15,000 psi]	1,480 bar [21,400 psi]	-
	PT ½	1,000 bar [15,000 psi]	1,480 bar [21,400 psi]	
	PT ⅜	1,000 bar [15,000 psi]	1,480 bar [21,400 psi]	
SAE J514	7/16-20 UNF O-ring BOSS	600 bar [8,700 psi]	858 bar [12,440 psi]	FPM/FKM
-	Flange connection	100 bar [1,450 psi]	143 bar [2,070 psi]	Without

Details must be tested separately in the respective application. The specified values for the overpressure limit serve only as a rough orientation. The values depend on the temperature, the sealing used, the selected torque, the type and the material of the mating thread and the prevailing operating conditions.

Further details on: Process connection	
Max. measuring range	→ See above
Overpressure limit	→ See above
Sealing	→ See above
Pressure port diameter	■ 3.5 mm (standard for all process connections) ■ 0.6 mm (compatible with all male threads) ■ 0.3 mm (compatible with all male threads) ■ 6 mm (compatible with G ¼ A, others on request) ■ T-restrictor possible (for process connections G ¼ B, G ⅜ B, G ½ B and M20 x 1.5)

Further details on: Process connection	
Possible restrictions	Depending on the choice of sealing on the process connection, there may be restrictions in the permissible temperature range
NBR	-30 … +100 °C [-22 ... +212 °F]
FPM/FKM	■ -20 … +100 °C [-4 ... +212 °F] ■ -40 … +100 °C [-40 ... +212 °F]
EPDM	-40 … +100 °C [-40 ... +212 °F]
Copper	-40 … +100 °C [-40 ... +212 °F]
Stainless steel	-40 … +100 °C [-40 ... +212 °F]

Output signal		
Signal type		
Current (2-wire)	4 ... 20 mA	
Voltage (3-wire)	■ DC 0 ... 10 V ■ DC 0 ... 5 V ■ DC 1 ... 5 V ■ DC 0.5 ... 4.5 V	
Ratiometric (3-wire)	DC 0.5 ... 4.5 V	
Load		
Current (2-wire)	≤ (auxiliary power - 8 V) / 0.02 A	
Voltage (3-wire)	> Maximum output signal / 1 mA	
Ratiometric (3-wire)	> 10k	
Voltage supply		
Auxiliary power	Output signal 4 ... 20 mA	■ DC 8 ... 30 V ■ DC 8 ... 35 V [1) 2)]
	Output signal DC 0 ... 5 V [1) 3)]	■ DC 8 ... 30 V ■ DC 8 ... 35 V
	Output signal DC 1 ... 5 V	■ DC 8 ... 30 V ■ DC 8 ... 35 V
	Output signal DC 0.5 ... 4.5 V	■ DC 8 ... 30 V ■ DC 8 ... 35 V
	Output signal DC 0 ... 10 V	■ DC 14 ... 30 V ■ DC 14 ... 35 V
	Output signal DC 0.5 ... 4.5 V, ratiometric	DC 5 V ±10 %
Current supply	Current (2-wire)	Signal current, max. 25 mA
	Voltage (3-wire)	8 mA
	Ratiometric (3-wire)	8 mA

Output signal		
Dynamic behaviour		
Settling time per IEC 61298-2	Measuring range ≥ 0.4 bar [≥ 5.8 psi]	< 1 ms [4]
	Measuring range < 0.4 bar [< 5.8 psi]	< 1 min
Switch-on time	Measuring range ≥ 0.4 bar [≥ 5.8 psi]	< 15 ms
	Measuring range < 0.4 bar [< 5.8 psi]	< 1 min

1) Not possible with non-linearity 0.25 % BFSL.
2) Only possible for temperatures up to 80 °C [176 °F].
3) Not possible with measuring ranges ≤ 0.1 bar [≤ 1.45 psi] (or equivalent).
4) < 300 ms with DNV approval and measuring range ≥ 0.4 bar [≥ 5.8 psi] ... ≤ 0.6 bar [≤ 8.7psi].

Other output signals on request.

The power supply for the pressure transmitter must be made via an energy-limited electric circuit in accordance with section 9.4 of UL/EN/IEC 61010-1 or an LPS per UL/EN/IEC 62368-1 or class 2 in accordance with UL1310/UL1585 (NEC or CEC). The voltage supply must be suitable for operation above 2,000 m should the pressure transmitter be used at this altitude.

Electrical connection				
Connection type	**IP code [1]**	**Wire cross-section**	**Cable diameter**	**Cable material**
Angular connector DIN 175301-803 A				
With mating connector, PG9 (standard)	IP65	To max. 1.5 mm²	6 ... 8 mm	-
With mating connector, PG11	IP65	To max. 1.5 mm²	8 ... 10 mm	
With mating connector, PG13.5 [2]	IP65	To max. 1.5 mm²	10 ... 14 mm	
With moulded cable	IP65	3 x 0.75 mm²	6 mm	PUR
Angular connector DIN 175301-803 C				
With mating connector [3]	IP65	To max. 0.75 mm²	4.5 ... 6 mm	-
With moulded cable	IP65	4 x 0.5 mm²	6.2 mm	PUR
Circular connector M12 x 1 (4-pin)				
Without mating connector	IP67	-	-	-
Straight with moulded cable	IP67	3 x 0.34 mm²	4.3 mm	PUR
Angled with moulded cable	IP67	3 x 0.34 mm²	4.3 mm	PUR
Cable outlet				
Unshielded [3]	IP67	3 x 0.34 mm²	4 mm	PUR
OEM version, unshielded [4]	IP67	3 x 0.14 mm²	2.85 mm	TPU

1) The stated IP codes only apply when plugged in using mating connectors that have the appropriate IP code.
2) Not feasible with cULus approval.
3) Not feasible with DNV approval.
4) To max. 90 °C [194 °F].

Further details on: Electrical connection	
Connection type	→ See above
Wire cross-section	→ See above
Cable diameter	→ See above
Pin assignment	→ See below
Ingress protection (IP code) per IEC 60529	→ See above
Short-circuit resistance	S+ vs. U-

Further details on: Electrical connection	
Reverse polarity protection	U_+ vs. U- No reverse polarity protection with ratiometric output signal
Insulation voltage	DC 500 V

Pin assignment

All connectors with moulded cable have the same colour assignment as the unshielded cable outlet.

Angular connector DIN 175301-803 A



	2-wire	3-wire
U_+	1	1
U-	2	2
S+	-	3

Cable outlet, unshielded

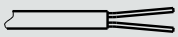

	2-wire	3-wire
U_+	Brown	Brown
U-	Blue	Blue
S+	-	Black

Angular connector DIN 175301-803 C



	2-wire	3-wire
U_+	1	1
U-	2	2
S+	-	3

Cable outlet, OEM version, unshielded

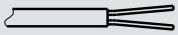

	2-wire	3-wire
U_+	Brown	Brown
U-	Blue	Blue
S+	-	Black

Circular connector M12 x 1 (4-pin)



	2-wire	3-wire
U_+	1	1
U-	3	3
S+	-	4

Legend

U_+ Positive power supply terminal
U- Negative power supply terminal
S+ Analogue output

Material	
Material (wetted)	
< 10 bar [150 psi]	Stainless steel 316L
≥ 10 bar [150 psi]	Stainless steel 316L and PH grade steel
≤ 25 bar abs. [400 psi abs.]	Stainless steel 316L
Material (in contact with the environment)	■ Stainless steel 316L ■ HNBR ■ PA and PBT ■ TPU and PUR (cable outlet)
Pressure transmission medium	
< 10 bar [150 psi]	Synthetic oil
≥ 10 bar [150 psi]	Dry measuring cell
≤ 25 bar abs. [400 psi abs.]	Synthetic oil

Operating conditions			
Permissible temperature ranges [1]	Depending on the selected medium temperature range the following values result		
	Standard	**With voltage signal**	**With current signal** [2] [3]
Medium temperature limit	0 ... 80 °C [32 ... 176 °F]	-30 ... +100 °C [-22 ... +212 °F]	-40 ... +100 °C [-40 ... +212 °F] [4]
Ambient temperature limit [5]	0 ... 80 °C [32 ... 176 °F]	-30 ... +100 °C [-22 ... +212 °F]	-40 ... +100 °C [-40 ... +212 °F] [4]
Storage temperature limit	-40 ... +70 °C [-40 ... +158 °F]	-40 ... +70 °C [-40 ... +158 °F]	-40 ... +70 °C [-40 ... +158 °F]

1) Restrictions of the temperature ranges due to the sealing used, see "Further details on: Process connection".
2) With cULus approval the minimum ambient and medium temperature is -30 °C [-22 °F].
3) Only with auxiliary power DC 8 ... 30 V.
4) Only with housed installation site that is protected from condensation.
5) Restrictions and derating of the ambient temperature depend on the medium temperature.

Further details on: Operating conditions		
Vibration resistance per IEC 60068-2-6	■ 10 g ■ 20 g (≥ -30 °C [-22 °F]) [1] on request	
Shock resistance per IEC 60068-2-27	With ≥ -30 °C [-22 °F]	500 g
	With < -30 °C [-22 °F]	100 g
Ingress protection (IP code) per IEC 60529	→ See "Electrical connection"	
Service life		
Measuring range ≥ 600 bar [≥ 8,700 psi]	10 million load cycles	
Measuring range > 0.1 bar [> 1.45 psi]	100 million load cycles	
Measuring range ≤ 0.1 bar [≤ 1.45 psi]	10 million load cycles	

1) With DNV approval only feasible for measuring range ≥ 0 ... 1.6 bar [≥ 0 ... 25 psi].

Packaging and instrument labelling	
Packaging	■ Individual packaging ■ Multiple packaging (up to 20 pieces possible)
Instrument labelling	■ WIKA product label, glued ■ Customer-specific product label on request

Approvals

Approvals included in the scope of delivery

Logo	Description	Country
CE	**EU declaration of conformity**	European Union
	EMC directive EN 61326 emission (group 1, class B) and immunity (industrial application)	
	Pressure equipment directive	
	RoHS directive	
UKCA	**UKCA**	United Kingdom
	Electromagnetic compatibility regulations	
	Pressure equipment (safety) regulations	
	Restriction of hazardous substances (RoHS) regulations	
EAC	**EAC**	Eurasian Economic Community
	EMC directive	
c UL us LISTED	**UL** Safety (e.g. electr. safety, overpressure, ...)	USA and Canada

Optional approvals

Logo	Description	Country
	PAC Russia Metrology, measurement technology	Russia
	PAC Kazakhstan Metrology, measurement technology	Kazakhstan
-	**MChS** Permission for commissioning	Kazakhstan
	PAC Belarus Metrology, measurement technology	Belarus
	PAC Ukraine Metrology, measurement technology	Ukraine
	PAC Uzbekistan Metrology, measurement technology	Uzbekistan
	DNV [1] Ships, shipbuilding (e.g. offshore)	Germany
-	**CRN** Safety (e.g. electr. safety, overpressure, ...)	Canada

1) Not for measuring ranges < 0.16 bar [< 2.3 psi] and not for medium temperature range -40 ... +100 °C [-40 ... +212 °F].

Manufacturer's information and certificates

Logo	Description
-	**China RoHS directive**
MTTF	> 100 years

Test report

Test report	
Non-linearity 0.5 %	3 measuring points
Non-linearity 0.25 %	5 measuring points

Certificates (option)

Certificates	
Certificate	2.2 test report per EN 10204 (e.g. state-of-the-art manufacturing, material proof, indication accuracy)

→ For approvals and certificates, see website

Dimensions in mm [in]

Pressure transmitter

With angular connector form A

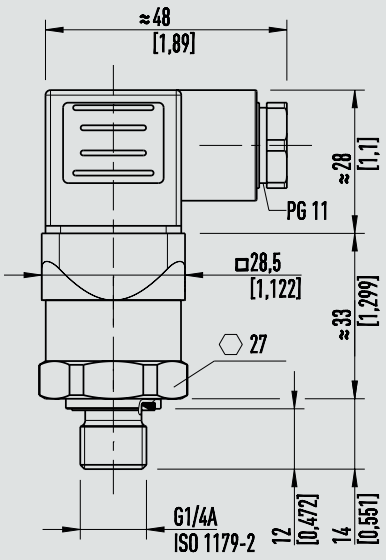

Weight: approx. 80 g [0.18 lb]

With angular connector form C

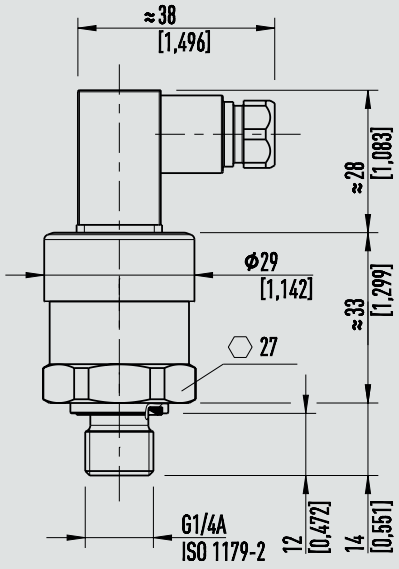

Weight: approx. 80 g [0.18 lb]

With circular connector M12 x 1

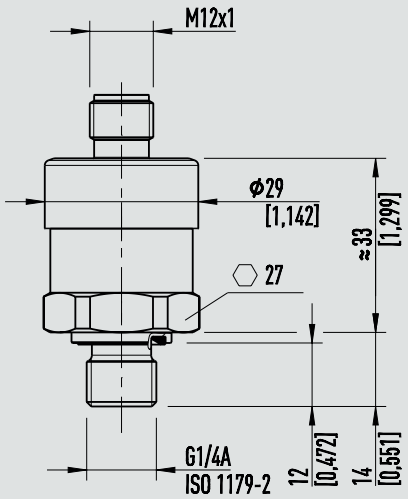

Weight: approx. 80 g [0.18 lb]

With standard cable outlet, unshielded

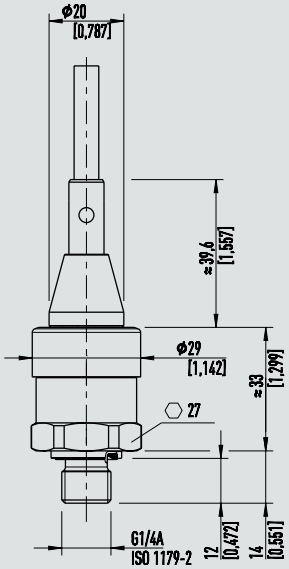

Weight: approx. 80 g [0.18 lb]

With cable outlet, OEM version, unshielded

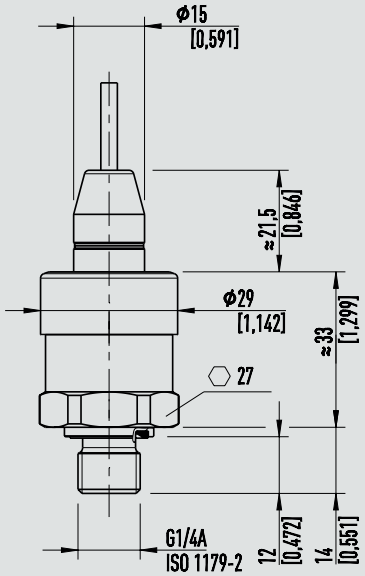

Weight: approx. 80 g [0.18 lb]

With angular connector form A and flange connection

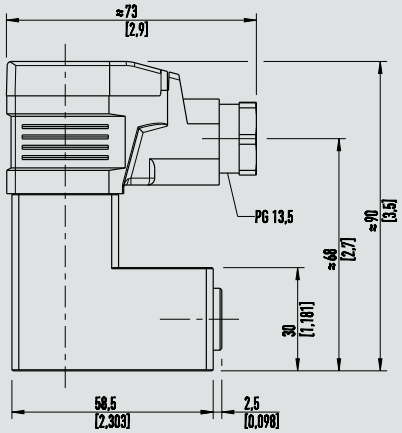

Weight: approx. 350 g [0.77 lb]

Process connections

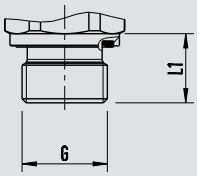

G	L1
G ¼ A DIN EN ISO 1179-2	14 [0.55]
G ½ A DIN EN ISO 1179-2	17 [0.67]
M14 x 1.5 DIN EN ISO 9974-2	14 [0.55]

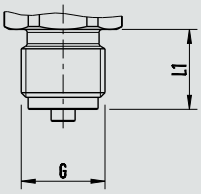

G	L1
G ¼ B EN 837	13 [0.51]
G ⅜ B EN 837	16 [0.63]
G ½ B EN 837	20 [0.79]
M20 x 1.5 DIN 16288	20 [0.79]

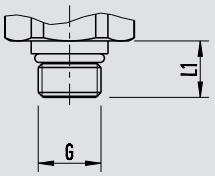

G	L1
7/16-20 UNF BOSS SAE J514	12.06 [0.48]

EN 837

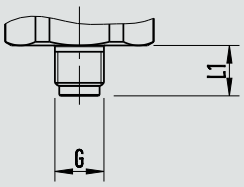

G	L1
G ⅛ B	10 [0.39]

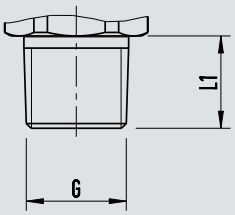

G	L1
⅛ NPT ANSI/ASME B1.20.1	10 [0.39]
¼ NPT ANSI/ASME B1.20.1	13 [0.51]
½ NPT ANSI/ASME B1.20.1	19 [0.75]
R ¼ ISO 7	13 [0.51]
R ⅜ ISO 7	15 [0.59]
R ½ ISO 7	19 [0.75]
PT ¼ KS	13 [0.51]
PT ⅜ KS	15 [0.59]
PT ½ KS	19 [0.75]

EN 837, female thread

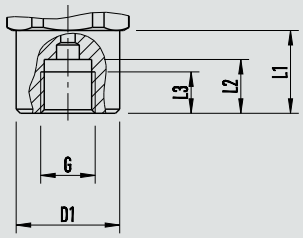

G	L1	L2	L3	D1
G ¼	20 [0.79]	13 [0.51]	10 [0.39]	Ø 25 [0.98]

ANSI/ASME B1.20.1, female thread

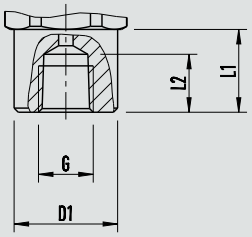

G	L1	L2	D1
¼ NPT	20 [0.79]	14 [0.55]	Ø 25 [0.98]

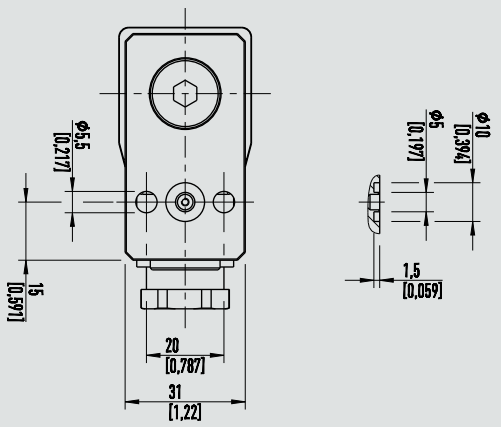

Flange connection	For dimensions see drawing

→ For information on tapped holes and welding sockets, see Technical information IN 00.14 at www.wika.com

Accessories and spare parts

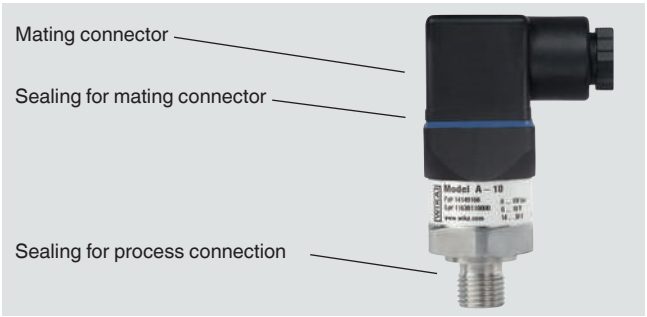

Description	Version	Order number
Mating connector		
Angular connector DIN 175301-803 A	Gland PG9	11427567
	Gland PG11	14243778
	Gland PG13.5	1604627
	With 2 m cable	11225793
	With 5 m cable	11250186
Angular connector DIN 175301-803 C [1)]	Gland PG7	1439081
	With 2 m cable	11225823
	With 5 m cable	11250194
Circular connector M12 x 1, 4-pin, straight	Without cable	2421262
	With 2 m cable	11250780
	With 5 m cable	11250259
Circular connector M12 x 1, 4-pin, angled	Without cable	2421270
	With 2 m cable	11250798
	With 5 m cable	11250232
Sealings for process connection		
G ⅛ EN 837	Copper	11251051
G ¼ B EN 837	Copper	11250810
	Stainless steel	11250844
G ⅜ B EN 837	Copper	11250861
	Stainless steel	11251042
G ½ B EN 837	Copper	11250861
	Stainless steel	11251042
M14 x 1.5 DIN EN ISO 9974-2	NBR	1537857
	FPM/FKM	14045531
	EPDM	14110827
M20 x 1.5 DIN 16288	Copper	11250861
	Stainless steel	11251042
7/16-20 UNF O-ring Boss SAE J514	FPM/FKM	14146066
G ¼ A DIN EN ISO 1179-2	NBR	1537857
	FPM/FKM	14045531
	EPDM	14110827
G ½ A DIN EN ISO 1179-2	NBR	1039067
	FPM/FKM	1039075

Description	Version	Order number
Sealings for mating connectors, blue (WIKA)		
Angular connector DIN 175301-803 A		1576240
Angular connector DIN 175301-803 C		11169479

1) Connector not permissible for model A-10 with DNV approval.

Only use the accessories listed above, otherwise it could lead to the loss of the approval.

Ordering information

Model / Non-linearity / Measuring range / Process connection / Sealing / Permissible medium temperature range / Output signal / Auxiliary power / Electrical connection / Certificates / Approvals

© 2011 WIKA Alexander Wiegand SE & Co. KG, all rights reserved.
The specifications given in this document represent the state of engineering at the time of publishing.
We reserve the right to make modifications to the specifications and materials.

WIKA Alexander Wiegand SE & Co. KG
Alexander-Wiegand-Straße 30
63911 Klingenberg/Germany
Tel. +49 9372 132-0
Fax +49 9372 132-406
info@wika.de
www.wika.de