MSA Confined Space Entry Kit

Technical Datasheet

The Safety Company



WE KNOW WHAT'S AT STAKE.

MSA Confined Space Entry Kit

Technical Datasheet

MSA Tripod Technical Specifications

Identification	
Part Number	10116521
Material	
Head	Aluminium alloy
Legs	High-tensile aluminium alloy
Feet	Clear Chromate Zinc-plated steel with skid-resistant rubber tread
Technical Specifications	
Dimensions	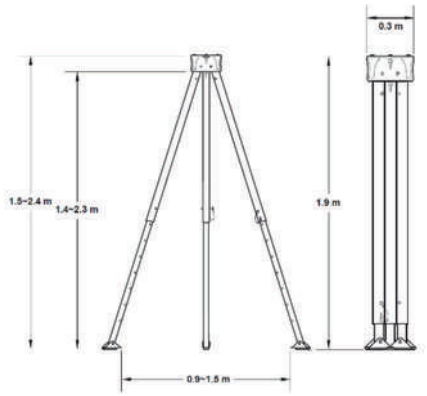
Weight	19,5 kg
Maximum material capacity	225 kg (when used with MSA Winch)
Maximum personnel capacity	Single user: 181 kg (according to EN 795) Two user: 200 kg (according to CEN/TS 16415)
Storage bag	
Part Number	10169369 (not included)
Certification	
Approvals	EN 795:2012 CEN/TS 16415:2013





Storage Bag
(P/N 10169369 - not included)

MSA Confined Space Entry Kit

Technical Datasheet

MSA Winch Technical Specifications

Identification	
Part Numbers	10147566, 10147567, 10153829, 10147296, 10153830, 10154688
Material	
Cover	Plastic and rubber
Frame	Zinc coated steel
Hub	Aluminium
Cable	5 mm non rotating stainless-steel/galvanized steel
Hook	Swivel zinc plate steel snaphook, 21mm gate
Technical Specifications	
Lifting and lowering gear ratio	20:1
Average lifting speed	4 m / min
Maximum Arrest Force	6 kN
Maximum Material Capacity	225 kg
Maximum Personnel Capacity	140 kg
Weight (of 20 m unit)	12.8 kg
Storage bag	
Part Number	10147986-SP (included)
Certification	
Approvals	EN 1496 class B Machinery Directive 2006/42/EC



MSA Winch
(P/N 10147567)



Storage Bag
(P/N 10147986-SP included)

MSA Rescuer Technical Specifications

Identification	
Part Number	10158192
Material	
Crank handle material	Carbon steel with zinc plating
Housing material	Cast aluminum
Cable	5 mm non rotating stainless-steel, 15m
Hook	Swivel zinc plate steel snaphook, 21mm gate, with load indicator
Technical Specifications	
Lifting and lowering gear ratio	5:1
Maximum Arrest Force	6 kN
Capacity	140 kg
Weight	16.3 kg (includes bracket)
Storage case	
Part Number	10161374 (included)
Certification	
Approvals	EN 360 EN 1496 class B



MSA Rescuer
(P/N 10158192)



Storage Case
(P/N 10161374 included)

MSA Confined Space Entry Kit

Technical Datasheet

Pulley Technical Specifications

Identification	
Part Number	506222
Material	
Plate side	Zinc plated steel
Sheave	Aluminium
Bearing	Non-metallic composite
Technical Specifications	
Maximum cable diameter	5 mm
Weight	0,4 kg
Certification	
Approvals	As part of the CSE Kit



Pulley
(P/N 506222)

Carabiner Technical Specifications

Identification	
Part Number	10129888
Material	
Body	High Tensile steel, yellow zinc plated
Technical Specifications	
Internal length	109 mm
Gate mechanism	Twist lock, self locking
Gate opening	25 mm
Gate Strength	16 kN / 3600 lbs
Minimum Breaking Strength	35 kN / 7868 lbs
Weight	0,32 kg
Certification	
Approvals	EN 362



Carabiner
(P/N 10129888)

MSA Confined Space Entry Kit

Technical Datasheet

MSA Spreader Bar Technical Specifications

Identification	
Part Number	10115550, 10115551
Material	
Webbing	Polyester
Thread	Bonded Polyester
D-Ring	Zinc plated steel
Oval Ringe	Zinc plated steel
Snaphooks	Steel (10115550) or aluminium (10115551)
Technical Specifications	
Dimensions	63,1(+/- 51mm) x 30 (+/- 51mm)
Weight	Spreader Bar, steel snaphooks: 1,22 kg Spreader Bar, aluminium snaphooks: 1,05 kg
Minimum breaking strength	22,24 KN
Capacity	100 kg
Snaphooks	Spreader Bar, steel snaphooks: Steel, Gate opening 19 mm, Length 145 mm Spreader Bar, aluminium snaphooks: Alu, Gate Opening 20 mm, Length 150 mm
Colour	Black / Yellow
Operating Temperature	-30°C …+50°C
Maximum lifespan	10 years
Certification	
Approvals	EN 354



Spreader Bar
(P/N 10115550)