PRK 18 Retro-reflective photoelectric sensors with polarization filter



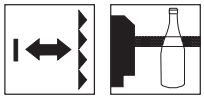

0 … 3m

10 - 30 V
DC

- Retro-reflective photoelectric sensor for reliable detection of transparent media (e.g. clear glass, PET, foil)
- User controlled sensitivity adjustment with high resolution allows detection of transparent objects
- The autocollimation principle used ensures that the device functions reliably over the entire range (0 … max.)

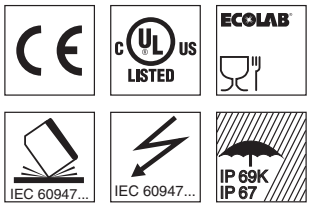

Accessories:

(available separately)

- Mounting system (BT 95)
- M12 connectors (KD 095…)
- M8 connectors (D M8…)
- Ready-made cables (K-D …)
- Reflectors
- Reflective tapes

Dimensioned drawing

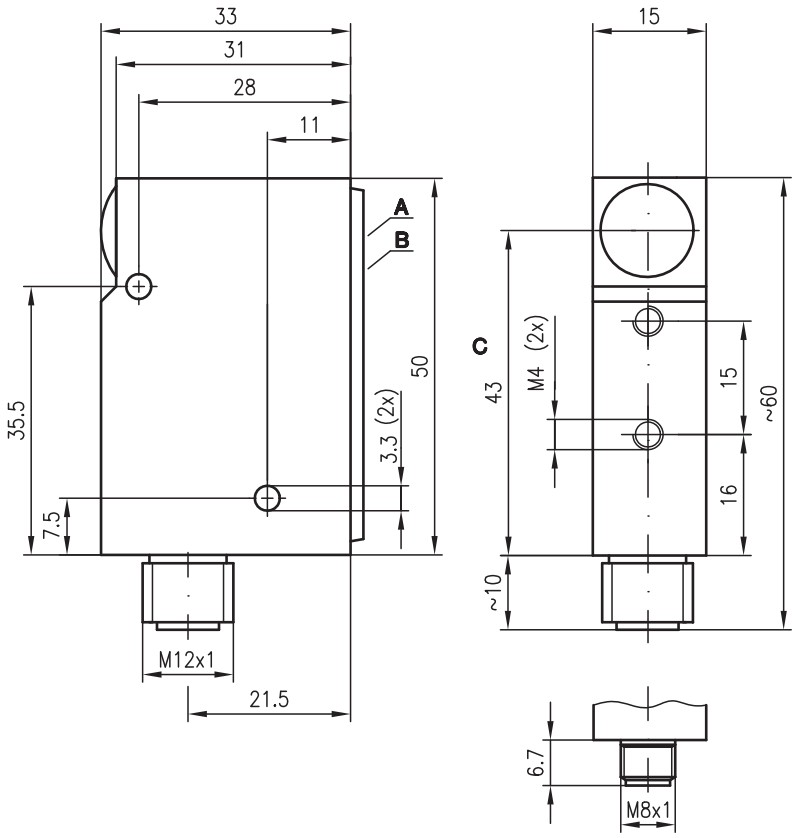

A Indicator diodes
B Sensitivity adjustment
C Optical axis

Electrical connection

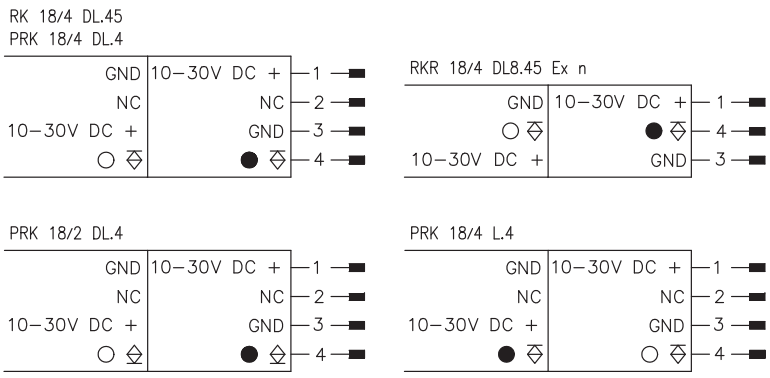

en 10-2014/05 50110547-01

We reserve the right to make changes • DS_PRK184DL4_en_50110547_01.fm

Specifications

Optical data

Typ. operating range limit (TK(S) 100x100) [1]	0 … 3m
Operating range [2]	see tables
Recommended reflector	MTKS 50x50.1
Light source	LED (modulated light)
Wavelength	660nm (visible red light, polarized)

Timing

Switching frequency	1500Hz
Response time	0.333ms
Delay before start-up	≤ 100ms

Electrical data

Operating voltage U_B [3] [4]	10 … 30VDC (incl. residual ripple)
Residual ripple	≤ 15% of U_B
Open-circuit current	≤ 35mA
Switching output	PNP or NPN transistor (see Order guide)
Function characteristics	dark or light switching (by reversing the polarity of U_B)
Signal voltage high/low	≥ (U_B-2V)/≤ 2V
Output current	max. 100mA
Sensitivity	adjustable with 12-turn potentiometer

Indicators

Yellow LED	switching output
Green LED, slowly flashing	operating point 1 **clear glass** – transition from quickly flashing to slowly flashing
Green LED, quickly flashing	operating point 2 **colored glass** – transition from cont. illuminated to quickly flashing
Green LED, continuous light	operating point 3 **opaque media** – continuous light

Mechanical data

Housing	diecast zinc
Optics	glass
Weight	150g
Connection type	M12 connector, 4-pin, stainless steel M8 connector, 3-pin, stainless steel

Environmental data

Ambient temp. (operation/storage)	-25°C … +55°C/-40°C … +70°C
Protective circuit [5]	2, 3
VDE safety class	III
Protection class	IP 67, IP 69K [6]
Light source	free group (in accordance with EN 62471)
Standards applied	IEC 60947-5-2
Certifications	UL 508, C22.2 No.14-13 [4] [7]

1) Typ. operating range limit: max. attainable range without performance reserve
2) Operating range: recommended range with performance reserve
3) Functional extra-low voltage with reliable disconnection or protective extra-low voltage (VDE 0100/T 410)
4) For UL applications: for use in class 2 circuits according to NEC only
5) 2=polarity reversal protection, 3=short circuit protection for all outputs
6) IP 69K test acc. to DIN 40050 part 9 simulated, high pressure cleaning conditions without the use of additives, acids and bases are not part of the test
7) These proximity switches shall be used with UL Listed Cable assemblies rated 30V, 0.5A min, in the field installation, or equivalent (categories: CYJV/CYJV7 or PVVA/PVVA7)

Operate in accordance with intended use!

- This product is not a safety sensor and is not intended as personnel protection.
- The product may only be put into operation by competent persons.
- Only use the product in accordance with the intended use.

Order guide

Selection table Equipment ↓		Order code →	PRK 18/4 DL.4 Part no. 50080153	PRK 18/2 DL.4 Part no. 50081153	RK 18/4 DL.45 Part no. 50081364	RKR 18/4 DL8.45 Part no. 50041446	RKR 18/4 DL.8.45.1 Part no. 50041448	PRK 18/4 L.4 Part no. 50104415
Application	transparent media		●	●	●	●	●	●
	foils > 5µm				●	●	●	
Switching output	PNP transistor		●		●	●	●	●
	NPN transistor			●				
Switching	light		●	●	●	●	●	●
	dark		●	●	●	●	●	●
LED	sensor back		●	●	●	●	●	●
Configuration	12-turn (sensor back)		●	●	●	●	●	●
Connection	M12 connector		●	●	●			●
	M8 connector					●	●	
Features	polarization filter		●	●				●
	stainless steel housing						●	

Tables

PRK 18/4 DL.4
RK 18/4 DL.45

Reflectors			Operating range
1	TK(S)	100x100	0 … 2.4m
2	MTKS	50x50.1	0 … 2.0m
3	TK(S)	30x50	0 … 0.8m
4	TK(S)	20x40	0 … 0.8m
5	Tape 6	50x50	0 … 1.8m

1	0			2.4	3.0
2	0			2.0	2.5
3	0	0.8	1.0		
4	0	0.8	1.0		
5	0			1.8	2.0

Operating range [m] *)
Typ. operating range limit [m] *)

*) For sensitivity set to operating point 3

Diagrams

Typ. object gap
(MTKS 50x50.1 at 400mm)

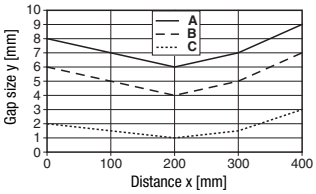

A Operating pt. 1
B Operating pt. 2
C Operating pt. 3

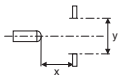

Remarks

Objects	Configuration (indicator LED yellow)
Clear glass, PET, foil	Operating pt. 1
colored glass	Operating pt. 2
Opaque objects	Operating pt. 3

- RK 18/4 … and RKR 18… For reflecting objects, the sensor has to be mounted approx. 5° angular towards the object.
- The light spot may not exceed the reflector.
- Preferably use MTK(S) or tape 6.
- For foil 6 the sensor's side edge must be aligned parallel to the side edge of the reflective tape.