

Image may differ from product. See technical specification for details.

GE 45 TXG3E-2LS

Radial spherical plain bearing, maintenance-free, metric sizes

Radial spherical plain bearings are designed to accommodate radial and combined radial and axial loads, and also misalignment. This specific design includes a steel/PTFE fabric sliding contact surface combination and the bearings are maintenance-free. Except for those with designation suffix TXGR, they have a double-lip contact seal (-2RS) or a triple-

lip, heavy duty contact seal (-2LS) on both sides. Those with designation suffixes TXGR, TXG3E or TXG3A are made of stainless steel.

- Designed for radial and combined radial and axial loads
- Long service life and maintenance-free
- Suitable for very heavy, constant direction loads
- Low coefficient of friction

Overview

Dimensions

Bore diameter	45 mm
Outside diameter	68 mm
Width, inner ring	32 mm
Width, outer ring	25 mm

Performance

Basic dynamic load rating	360 kN
Basic static load rating	600 kN

Properties

Sliding contact surface combination	Steel/PTFE fabric
Material, inner ring	Stainless steel
Material, outer ring	Stainless steel
Maintenance	Maintenance-free
Sealing	Seal on both sides
Sealing type	Triple-lip
Relubrication feature	Without

Logistics

Product net weight	0.392 kg
eClass code	23-05-01-06
UNSPSC code	31171515

Technical specification

Maintenance	Maintenance-free
Sliding contact surface combination	Steel/PTFE fabric
Material, inner ring	Stainless steel
Material, outer ring	Stainless steel
Sealing	Seal on both sides
Sealing type	Triple-lip

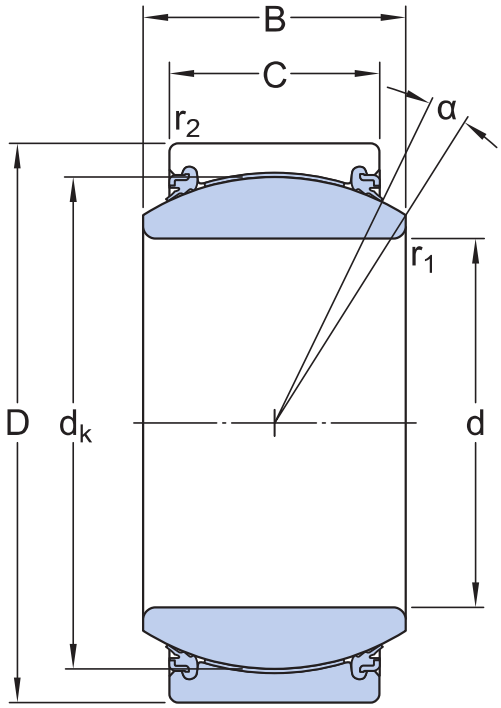

Dimensions

d	45 mm	Bore diameter
D	68 mm	Outside diameter
B	32 mm	Width
C	25 mm	Width outer ring
α	7 °	Angle of tilt
d_k	60 mm	Raceway diameter inner ring
r_1	min. 0.6 mm	Chamfer dimension bore
r_2	min. 1 mm	Chamfer dimension outer ring

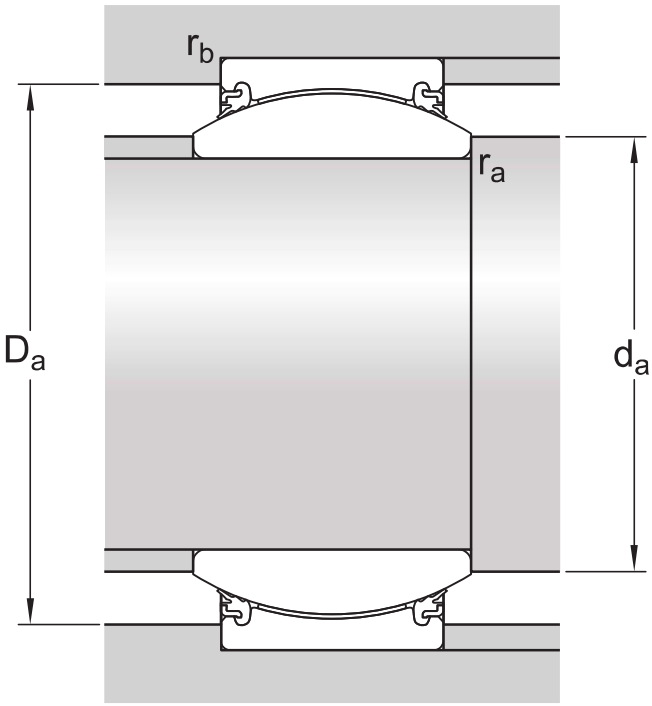

Abutment dimensions

d_a	min. 49.5 mm	Abutment diameter shaft
d_a	max. 50.8 mm	Abutment diameter shaft
D_a	min. 61 mm	Abutment diameter housing
D_a	max. 63.5 mm	Abutment diameter housing
r_a	max. 0.6 mm	Fillet radius shaft
r_b	max. 1 mm	Fillet radius housing

Calculation data

Basic dynamic load rating	C	360 kN
Basic static load rating	C_0	600 kN
Specific dynamic load factor	K	300 N/mm²
Specific static load factor	K_0	500 N/mm²

Tolerances and clearances

- General bearing specifications

RADIAL LOCATION OF BEARINGS

- Recommended fits

More Information

Product details

- Radial spherical plain bearings requiring maintenance
- Maintenance-free radial spherical plain bearings
- General bearing specifications
- Temperature limits

Engineering information

- Principles of selection

Tools

- SKF Product select
- Heater selection tool

Terms of use

By accessing and using this website / app owned and published by AB SKF (publ.) (556007-3495 · Gothenburg) (“SKF”), you agree to the following terms and conditions:

Warranty Disclaimer and Limitation of Liability

Although every care has been taken to assure the accuracy of the information on this website / app, SKF provides this information "AS IS" and DISCLAIMS ALL WARRANTIES, EXPRESS OR IMPLIED, INCLUDING, BUT NOT LIMITED TO, IMPLIED WARRANTIES OF MERCHANTABILITY AND FITNESS FOR A PARTICULAR PURPOSE. You acknowledge that your use of this website / app is at your sole risk, that you assume full responsibility for all costs associated with use of this website / app, and that SKF shall not be liable for any direct, incidental, consequential, or indirect damages of any kind arising out of your access to, or use of the information or software made available on this website / app.

Any warranties and representations in this website / app for SKF products or services that you purchase or use will be subject to the agreed upon terms and conditions in the contract for such product or service.

Further, for non-SKF websites / apps that are referenced in our website / app or where a hyperlink appears, SKF makes no warranties concerning the accuracy or reliability of the information in these websites / apps and assumes no responsibility for material created or published by third parties contained therein. In addition, SKF does not warrant that this website / app or these other linked websites / apps are free from viruses or other harmful elements.

Third Party Services

When viewing YouTube content via the SKF website(s) (i.e. using YouTube API Services), you agree to be bound by the YouTube Terms of Service.

Copyright

Copyright in this website / app copyright of the information and software made available on this website / app rest with SKF or its licensors. All rights are reserved. All licensed material will reference the licensor that has granted SKF the right to use the material. The information and software made available on this website / app may not be reproduced, duplicated, copied, transferred, distributed, stored, modified, downloaded or otherwise exploited for any commercial use without the prior written approval of SKF. However, it may be reproduced, stored and downloaded for use by individuals without prior written approval of SKF. Under no circumstances may this information or software be supplied to third parties.

This website /app includes certain images used under license from Shutterstock, Inc.

Trademarks and Patents

All trademarks, brand names, and corporate logos displayed on the website / app are the property of SKF or its licensors, and may not be used in any way without prior written approval by SKF. All licensed trademarks published on this website / app reference the licensor that has granted SKF the right to use the trademark. Access to this website / app does not grant to the user any license under any patents owned by or licensed to SKF.

Changes

SKF reserves the right to make changes or additions to this website / app at any time.