16230-013 NOVASTAR CABINET WITHOUT DOOR AND REAR PANEL, HEAVY-DUTY, RAL 7021/7035, 1745H 553W 600D



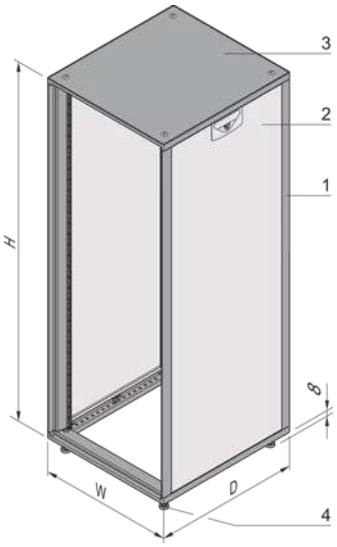

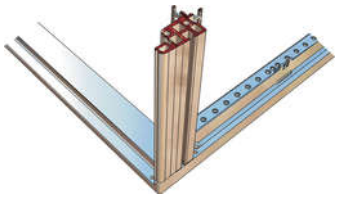

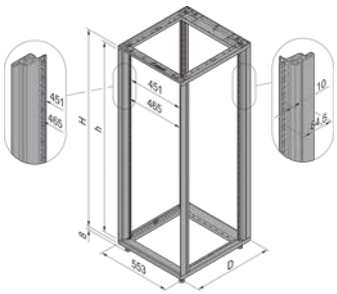

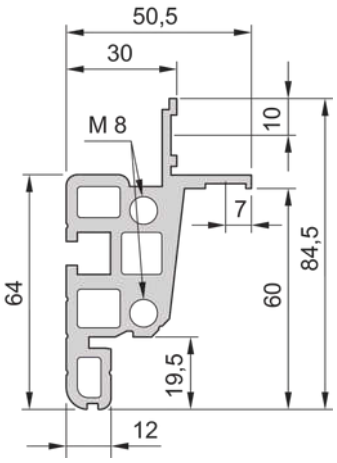

KEY FEATURES

- Static load-carrying capacity up to 400 kg (see specification table)
- Type of protection IP 20
- Cabinet width only 553 mm
- Flush cladding parts
- All uprights (front and rear) with 19" cut-outs

Colors: RAL 7021 or color combination RAL 7021/ RAL 7035

Bolted, die-cast frame with Al extrusions

Without door and rear panel

PRODUCT ATTRIBUTES

Product Type: Cabinet

Product Family: Novastar

Frame Material: Aluminum

Frame Color: Black Grey

Frame Color Code: RAL 7021

Cladding Material: Steel

Cladding Color: Light Grey

Cladding Color Code: RAL 7035

Rack Height: 38 U

Height: 1745 mm

Width: 553 mm

Depth: 600 mm

Static Load: 400 kg

Complies With: IEC 60297-3-100

ADDITIONAL PRODUCT DETAILS

Aluminum frame cabinets with attractive design, ideally suited for general electronics, test and measurement, audio/video and broadcasting applications.

CERTIFICATIONS

RoHS COMPLIANT

North America
All locations
+1.763.422.2661
Chat with us:
schroff.nvent.com

Europe
Straubenhardt, Germany
+49.7082.794.0
Betschdorf, France
+33.3.88.90.64.90
Warsaw, Poland
+48.22.209.98.35
Assago, Italy
+39.02.932.7141
Chat with us:
schroff.nvent.com

Asia
Shanghai, China
+86.21.2412.6943
Qingdao, China
+86.532.8771.6101
Singapore
+65.6768.5800
Shin-Yokohama, Japan
+81.45.476.0271
Chat with us:
schroff.nvent.com

Middle East & India
Dubai, United Arab Emirates
+971.4.378.1700
Bangalore, India
+91.80.6715.2001
Istanbul, Turkey
+90.216.250.7374
Chat with us:
schroff.nvent.com

nVent

Our powerful portfolio of brands:
nVent.com **CADDY ERICO HOFFMAN RAYCHEM SCHROFF TRACER**

© 2023 nVent. All nVent marks and logos are owned or licensed by nVent Services GmbH or its affiliates. All other trademarks are the property of their respective owners.

nVent reserves the right to change specifications without notice.