Compact Solenoid Valve - General Purpose

Threaded Port G 1/8" – G 3/8"

Type 6013

2/2-Way; G 1/8" – G 3/8"; PN up to 25 bar



Advantages/Benefits

- **Coil can easily be changed with valve in place**
- **Coil lockable in 4 x 90° positions or freely movable in between, as required**
- **Medium is only in contact with the valve internals and the body**
- **High-quality seal material FKM as standard**
- **High temperature option**

Design/Function

The 6013 valves are based on a modular concept comprising three basic elements: Valve body, push-over coil and standard cable plug. The valve assembly consists of a body to which the armature guide tube containing the plunger, seals and springs is attached.
The coil is pushed over the guide tube and thus isolated from the medium.
The medium is only in contact with the valve internals and body.

A wide selection of port and orifice sizes is offered. The valve body material is brass and stainless steel. All valves have high quality FKM seals as standard.

To simplify ordering, a wide selection of standard combinations of valve body, push over coil and standard cable plug can be ordered with one order number.

Cable plug options of Type 2508 are available to suit special electrical application requirements.

– The modular concept provides flexibility to meet application requirements.

– The valves are interchangeable with Type 211.

Applications

Fluids
Brass version:
Neutral gases and liquids, e.g. compressed air, town gas, natural gas, water, hydraulic oil, petrol.
Stainless steel version:
Difficult and slightly aggressive media
High temperature version:
Steam

Suitable for technical vacuum

Applications
- Pneumatic control
- Shut-off, dosing, filling and venting
- Small-scale instruments, laboratory and measuring technology
- Welding technology

bürkert
Easy Fluid Control Systems

DTS 1000011032 EN Version: B Status: RL (released I freigegeben I validé) printed: 30.06.2006

Compact Solenoid Valve - General Purpose **Type 6013**

Threaded Port G 1/8" – G 3/8"

Technical Data Type 6013

Circuit function

A 2/2-way valve, normally closed

Symbol

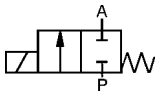

Operating Data (Valve)

Pressure range	0-25 bar (see specifications)
Port connection	Threaded port G 1/8"-G 3/8"
Orifice	DN 2,0-6,0 mm
Fluid	Neutral gases and liquids, e.g. compressed air, town gas, natural gas, water, hydraulic oil, petrol. Stainless steel version for difficult and slightly aggressive media. High temperature version for steam. Suitable for techn. vacuum.
Medium temperature	
FKM	–10 up to +100 °C
PTFE / Graphite	0 up to +180 °C
Max. ambient temperature	+55 °C
Max. viscosity	21 mm²/s
Response times	
Opening	AC, DC 20 ms
Closing	AC, DC 30 ms
Installation	As required, but preferably with solenoid system upright

Operating Data (Actuator)

Operating voltages	AC 24, 110, 230 V/50 Hz, 24 V/DC
Voltage tolerance	±10 %
Power consumption	See ordering chart
Duty cycle Duty cycle for multiple manifolds	100% continuously rated 60% periodic duty (30 min) or use 5W-version (on request)
Cycling rate	Up to 1 000 c.p.m.
Rating with cable plug	IP 65
Electr. connection	Delivery standard: Cable plug DIN 43 650 A, 0-250 V. (other versions see accessories)
On request	• Ex version EEx me II T4 • Analytical version • DVGW version

Materials

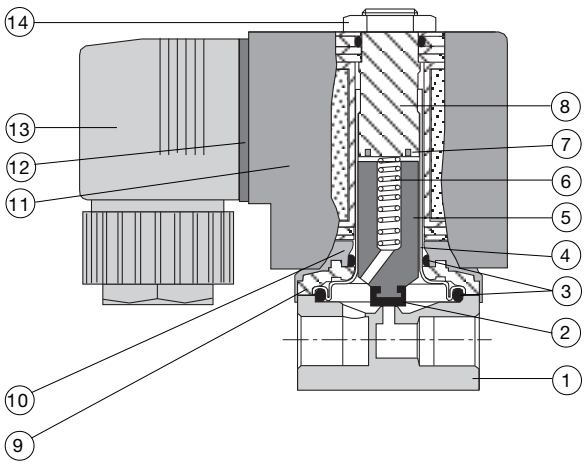

1	Valve body:	Brass, SS 1.4305 (G1/8") SS 1.4401 (G1/4")
2	Plunger-seal:	FKM
3	O-rings:	FKM
4	Armature guide tube:	1.4303
5	Plunger:	1.4105
6	Spring:	1.4310
7	Shading ring:	Cu (brass version) Ag (stainless steel version)
8	Stopper:	1.4105
9	Flange:	Zn3 gl cC (surface)
10	Bonnet:	Durethan BKV30H
11	Coil:	PA (Polyamide)
12	Flat seal:	NBR
13	Cable plug:	PA (Polyamide)
14	Locknut:	9SMnPb28K (surface Zn5glcA)

DTS 1000011032 EN Version: B Status: RL (released I freigegeben I validé) printed: 30.06.2006

Compact Solenoid Valve - General Purpose **Type 6013**

Threaded Port G 1/8" – G 3/8"

Specifications - Ordering Chart (Other Versions on Request)

Standard version (up to 100 °C); FKM sealing

(with standard-cable plug 0-250 V AC/DC)

Circuit function	Orifice [mm]	Port connection [inch]	Kv-Value water[1] [m³/h]	Power consumption (coil) [W]	Pressure range[2] [bar]	Voltage/ frequency [V/Hz]	Item-No. • Brass body • FKM seal	Item-No. • SS body • FKM seal
A	2.0	G 1/8	0.12	8	0 – 12	24/DC	134 237 M	134 233 R
					0 – 25	24/50	132 865 R	134 234 J
					0 – 25	110/50	134 238 W	134 235 K
					0 – 25	230/50	134 239 X	134 236 L
A	2.0	G 1/4	0.12	8	0 – 12	24/DC	137 537 D	137 533 H
					0 – 25	24/50	137 538 N	137 534 A
					0 – 25	110/50	137 539 P	137 535 B
					0 – 25	230/50	137 540 U	137 536 C
A	2.5	G 1/8	0.16	8	0 – 10	24/DC	134 240 C	–
					0 – 16	24/50	134 241 Z	–
					0 – 16	110/50	134 242 S	–
					0 – 16	230/50	134 243 T	–
A	2.5	G 1/4	0.16	8	0 – 10	24/DC	137 541 R	–
					0 – 16	24/50	137 542 J	–
					0 – 16	110/50	137 543 K	–
					0 – 16	230/50	137 544 L	–
A	3.0	G 1/8	0.23	8	0 – 6	24/DC	126 091 F	126 078 Z
					0 – 10	24/50	126 092 G	126 079 S
					0 – 10	110/50	126 093 H	126 080 Q
					0 – 10	230/50	126 094 A	126 081 D
A	3.0	G 1/4	0.23	8	0 – 6	24/DC	125 301 V	125 317 L
					0 – 10	24/50	125 302 W	126 082 E
					0 – 10	110/50	125 303 X	126 083 F
					0 – 10	230/50	125 304 Y	126 084 G
A	4.0	G 1/4	0.30	8	0 – 1.5	24/DC	125 306 S	125 318 V
					0 – 4	24/50	125 307 T	125 319 W
					0 – 4	110/50	125 308 C	126 085 H
					0 – 4	230/50	125 309 D	125 320 T
A	6.0	G 1/4	0.55	8	0 – 0.5	24/DC	125 311 N	–
					0 – 1.5	24/50	125 312 P	–
					0 – 1.5	110/50	125 313 Q	–
					0 – 1.5	230/50	125 314 R	–
A	3.0	G 3/8	0.23	10	0 – 8	24/DC	134 248 G	–
					0 – 14	24/50	134 249 H	–
					0 – 14	110/50	134 250 E	–
					0 – 14	230/50	134 251 T	–
A	4.0	G 3/8	0.30	10	0 – 2.5	24/DC	134 252 U	–
					0 – 6	24/50	134 253 V	–
					0 – 6	110/50	134 254 W	–
					0 – 6	230/50	134 255 X	–
A	6.0	G 3/8	0.55	10	0 – 0.75	24/DC	134 256 Y	–
					0 – 2.5	24/50	134 257 Z	–
					0 – 2.5	110/50	134 258 A	–
					0 – 2.5	230/50	134 259 B	–

High temperature version (up to 180 °C); PTFE/Graphite sealing

(with standard-cable plug 0-250 V AC/DC)

Circuit function	Orifice [mm]	Port connection [inch]	Kv-Value water[1] [m³/h]	Materials	Power consumption (coil) [W]	Pressure range[2] [bar]	Voltage/ frequency [V/Hz]	Item-No. • PTFE/Graph. seal
A	2.0	G 1/4	0.12	Brass body SS seat	8	0 – 6.00	24/DC	136 015 C
						0 – 10.00	24/50	136 016 D
						0 – 10.00	110/50	136 017 E
						0 – 10.00	230/50	136 018 P
A	3.0	G 1/4	0.23	Brass body SS seat	10	0 – 6.00	24/DC	136 019 Q
						0 – 10.00	24/50	136 020 M
						0 – 10.00	110/50	136 021 A
						0 – 10.00	230/50	136 022 B
A	3.0	G 3/8	0.23	Brass body SS seat	10	0 – 6.00	24/DC	136 023 C
						0 – 10.00	24/50	136 024 D
						0 – 10.00	110/50	136 025 E
						0 – 10.00	230/50	136 026 F

[1] Measured with 6 bar upstream pressure and 1 bar pressure drop across the valve at +20 °C.
[2] All pressures quoted are gauge pressures with respect to the prevailing atmospheric pressure.

Options on request:

- Rc and NPT threads
- Other voltages and 60 Hz
- EEx, UL and CSA approvals
- Sub-base
- EPDM seals for -30 up to +120°C

DTS 1000011032 EN Version: B Status: RL (released I freigegeben I validé) printed: 30.06.2006

Dimensions [mm]

Threaded port version

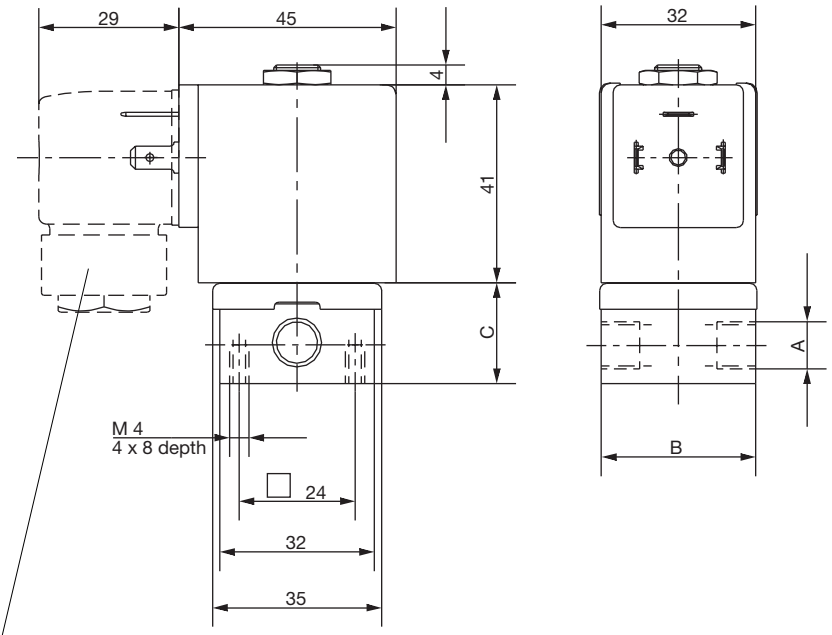

Cable plug DIN 43650, form A,
(0-250 V AC/DC) delivery standard.

Variable dimensions [mm]

	A	B	C
Threaded port G	1/8	32	20.8
Threaded port G	1/4	46	26.8
Threaded port G	3/8	50	39.8

Dimensions Accessories [mm]

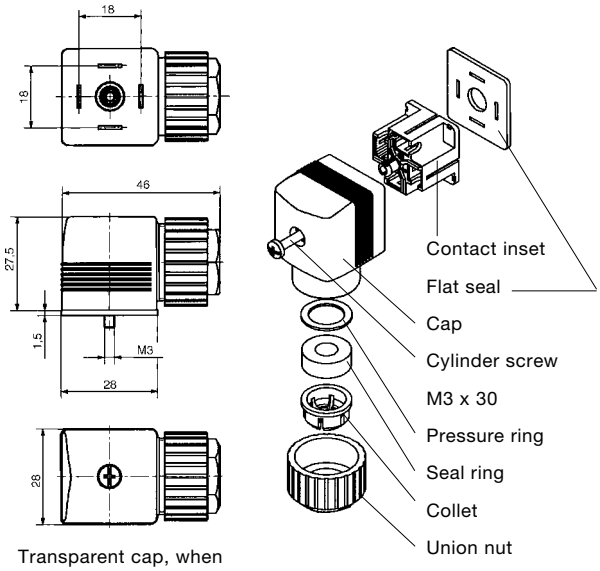

Transparent cap, when
wired with LED.

Ordering Chart for Accessories

Device/ Accessory	Features	Item-No.
Cable plugs[1)] Type 2508	Standard cable plug, 0–250 V AC/DC (standard-delivery)[1)]	008 376 N
	with LED, 12–24 V AC/DC	008 360 S
	with LED, 100-120 V AC/DC	008 361 P
	with LED + varistor, 12–24 V AC/DC	008 367 M
	with LED + varistor, 100–120 V AC/DC	008 368 W
	with LED + varistor, 200–240 V AC/DC	008 369 X
	(optional wirings and connection specifications see data sheet Type 2508)	

[1)] **The standard cable plug (0-250 V AC/DC), Order-No. 008 376 N is part of the standard delivery.**
Ordering of optional cable plugs with separate item number.

A wide selection of further cable plugs is available
(see data sheet type 2508)

DTS 1000011032 EN Version: B Status: RL (released I freigegeben I validé) printed: 30.06.2006