OY826S

Safety light curtain

OYA0760-40-4-18-P-1-B

For 8-pole sockets the core colours are not standardised.
Please note the wiring of the sensor and the sockets (see data sheet).

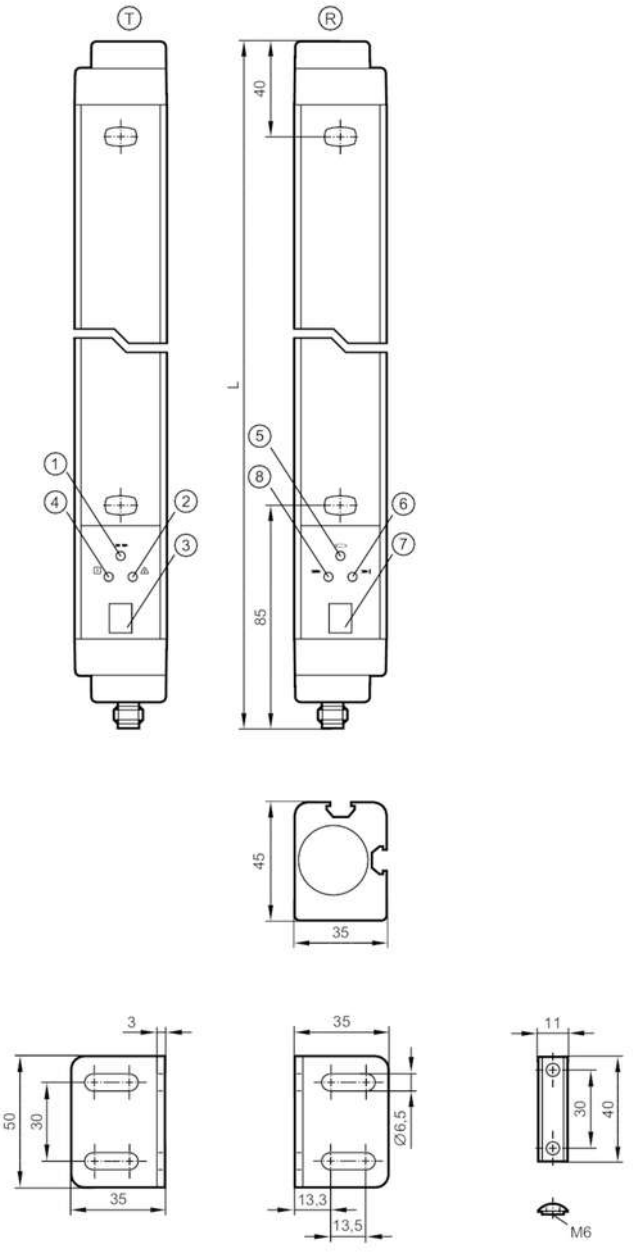

T	transmitter
R	receiver
1	LED yellow
2	LED red
3	7-segment LED display
4	LED green
5	LED yellow
6	LED red
7	7-segment LCD display
8	LED green

Product characteristics

Type of light	infrared light

OY826S

Safety light curtain

OYA0760-40-4-18-P-1-B

Electrical design		PNP
Protection		IP 65
Application		
Protective function		access prevention hand protection
Electrical data		
Operating voltage tolerance	[%]	20
Operating voltage	[V]	24 DC
Protection class		III
Reverse polarity protection		yes
Power-on delay time	[s]	< 18
Type of light		infrared light
Wave length	[nm]	950
Receiver		
Current consumption	[mA]	125
Transmitter		
Current consumption	[mA]	83
Outputs		
Electrical design		PNP
Number of OSSD outputs		2
Max. current load per OSSD output	[mA]	500; (24 V)
Short-circuit protection		yes
Detection zone		
Protected area height	[mm]	760
Resolution (detection capacity d)	[mm]	40
Protection area width (low light intensity)	[m]	0...6
Protection area width (high light intensity)	[m]	3...18
Floating blanking		yes
Response times		
Response time	[ms]	9.5
Operating conditions		
Applications		class C to EN 60654-1 weatherproof application
Ambient temperature	[°C]	0...55
Max. relative air humidity	[%]	95
Protection		IP 65
Tests / approvals		
EMC		IEC 61496-1
Shock resistance		IEC 61496-1
Vibration resistance		IEC 61496-1
Safety classification		
ESPE type (IEC 61496-1)		4

OY826S

Safety light curtain

OYA0760-40-4-18-P-1-B

Complies with the requirements			ISO 13849-1: 2015 category 4, PL e
			IEC 61508 SIL 3
			IEC 62061 SIL 3
Mission time TM	[h]		175200
PFH	[1/h]		1,2E-08
Mechanical data			
Weight	[g]		4800
Dimensions	[mm]		861 x 35 x 45
Materials			housing: aluminium; front pane: PC
Length L	[mm]		861
Displays / operating elements			
Display		transmitter	3 x LED
		transmitter	7-segment LCD display
		receiver	3 x LED
		receiver	7-segment LCD display
Accessories			
Items supplied			mounting bracket: 4
			slot nuts: 4
			screws
Remarks			
Pack quantity			1 pcs.

Electrical connection - receiver

Connector: 1 x M12; coding: A; Maximum cable length: 100 m; for wire cross-section 0.34 mm²



OY826S

Safety light curtain

OYA0760-40-4-18-P-1-B

Connection

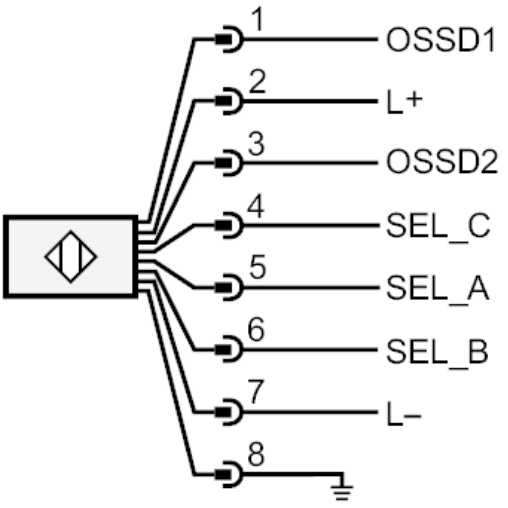

Electrical connection - transmitter

Connector: 1 x M12; coding: A

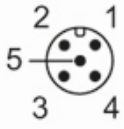

Connection

