Brand of NTN corporation

Technical data

UKP213HCO

Bearing units



Grey cast housing, radial insert ball bearing with adapter sleeve,seal with slinger.In the figure, bearing units are presented with one open and one closed cover. The product you have chosen is equipped with two open covers.

KIT CONTENT

SCO213-60, UK213G2H, P213N

VISUAL (S)

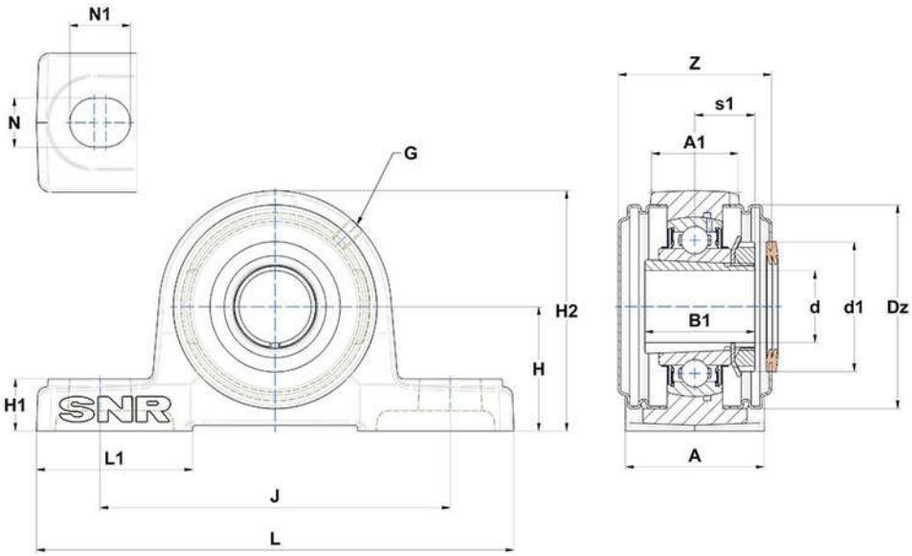

PRODUCT DEFINITION

Brand	SNR
A - Housing width	70 mm
A1 - Housing top width	46 mm
B - Width of Inner Ring	36 mm
d - Shaft diameter	60 mm

NTN Europe
1 rue des Usines · BP 2017 · 74010 Annecy Cedex · France · Tel. +33 (0)4 50 65 30 00
S.A. au capital de 322 639 919 € · RCS ANNECY B 325 821 072 · Id. Fiscale : FR 48 325 821 072
SIRET 325 821 072 00015 · Code APE 2815 Z · Code NACE 28.15

UKP213HCO
Bearing units

PRODUCT DEFINITION	
d1 - Outer dia of eccent. Lock. collar / nut of adapter sleeve	85 mm
Dz - Outer diameter of cover	132 mm
G - Grease fitting	M6x1
H - Distance mounting base to centerline spheric. seating diam.	76,2 mm
H1 - Housing foot height	27 mm
H2 - Housing height	150 mm
J - Mounting holes distance	203 mm
L - Housing length	265 mm
L1 - Housing foot length	77 mm
N - Mounting hole dimension	25 mm
N1 - Mounting hole length	29 mm
Z - Width over covers	90,8 mm

PRODUCT PERFORMANCE	
C - Dynamic load rating	57200000 mN
C0 - Static load rating	40000000 mN
Operating temperature min.	253,15 °K
Operating temperature max.	373,15 °K

OTHER FEATURES	
Mass	6,218 kg
Adapter sleeve designation	H2313