IO-Link master 1.1 with integrated USB port
1-channel operation in IOL or SIO mode
USB-2-IOL-0002

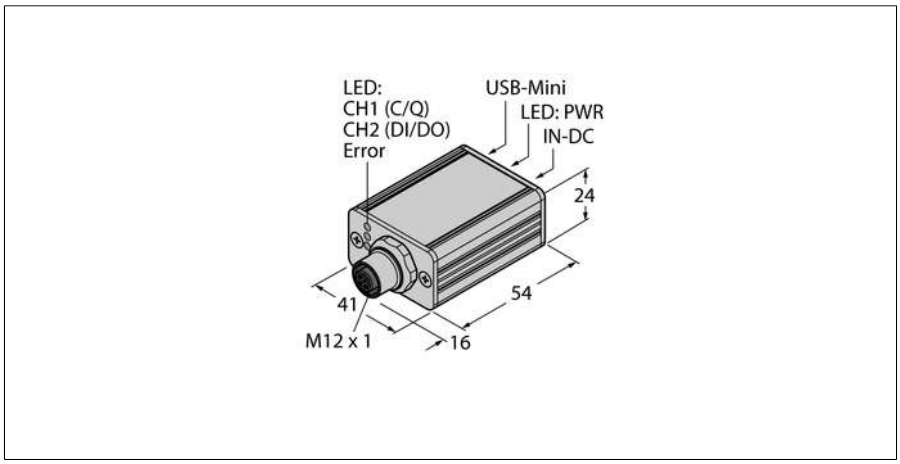

- **USB compatible IO-Link master**
- **Commissioning of IOL devices**
- **Control environment not required**
- **Parametrization via FDT/DTM**
- **Transmission of process data**
- **Transmission of service data**
- **Integrated USB-B port**
- **Integrated M12 x 1 connection**
- **Power supply via USB-B**
- **Alternatively via plug-in power supply**
- **Compact aluminium housing**
- **Protection class IP40**

Type designation	USB-2-IOL-0002
Ident no.	6825482
IO-Link	1-channel operation in IOL or SIO mode
Operating mode	SIO, COM1, COM2, COM3
Number of IO-Link port	1
Network	USB
Supply voltage	24 VDC
IO-Link port	M12 x 1 (A-coded)
Max. load current above IO-Link port	40 mA via USB-B (1.6 A via ext. power supply)
Network connection	USB-B
Temperature range	-5…55 °C
Storage temperature	-25…70 °C
Dimensions	54 x 41 x 24 mm (l x w x h)
Weight	approx. 0.096 kg
Housing quality	AL
Protection class	IP40

M12 × 1

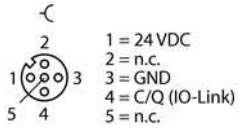

Functional principle

IO-Link devices are easily put into operation with the IO-Link master 1.1.

Commissioning of IO-Link devices, reading of process data (PD) and reading/writing of specified service data (SD) is possible, independently from the higher-level control. Pin 4 (C/Q) of the IO-Link master can be operated either in the IO-Link mode (IOL) or in the standard IO mode (SIO), depending on the DTM parametrization. The following transmission rates are possible 4.8 kbps (COM1), 38.4 kbps (COM2) and 230.4 kbps (COM3). Depending on the connected IO-link device, data back-up via an integrated parametrizing server is also supported.

Easy connection to PC via USB port. Latest DTM version available for download on www.turck.com.

IO-Link devices are directly supplied via the integrated mini USB port. In the event of increased current consumption, the connected devices should be supplied by the external plug-in power unit.

Edition • 2018-05-21T07:54:24+02:00

LED status IO-Link master

LED	Color	Status	Description
PWR	yellow	off	power off
		flashing	undervoltage, overload with power suppy via USB
		on	ready
CH1(C/Q)	green	off	SIO mode active
		slowly flashing	IO-Link Scan Mode active, no communication
		fast flashing	IO-Link Preoperate Mode active
		on	IO-Link Operate Mode active
	yellow	off	low signal at port 1
		on	high signal at port 1
CH2(DI/DO)	yellow	off	low signal at port 2
		on	high signal at port 2
Error	red	off	no error
		on	short-circuit, overload, communication error

Edition • 2018-05-21T07:54:24+02:00