A-A

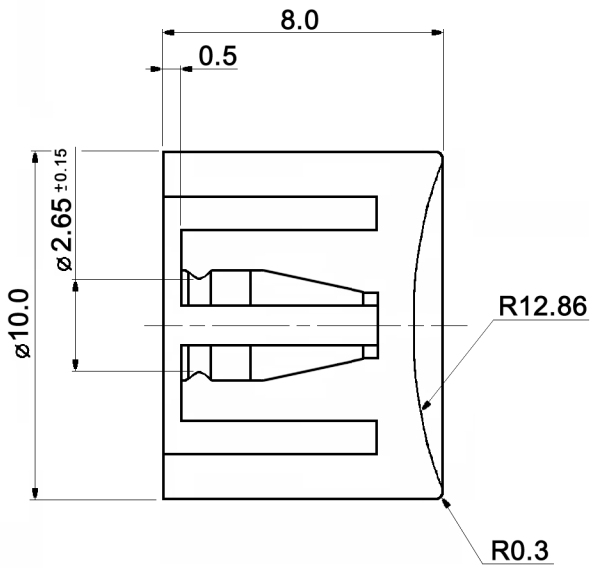

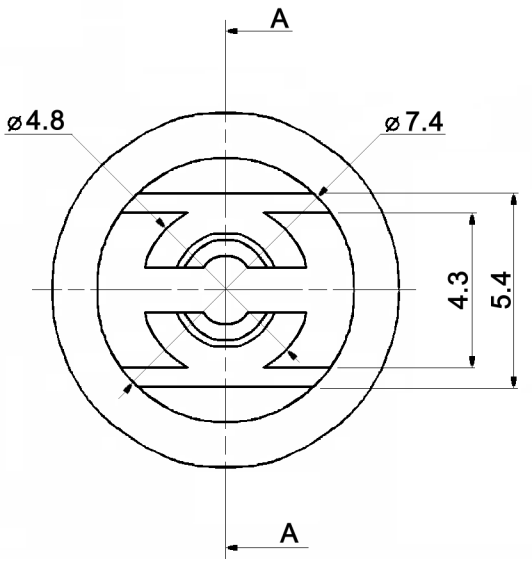

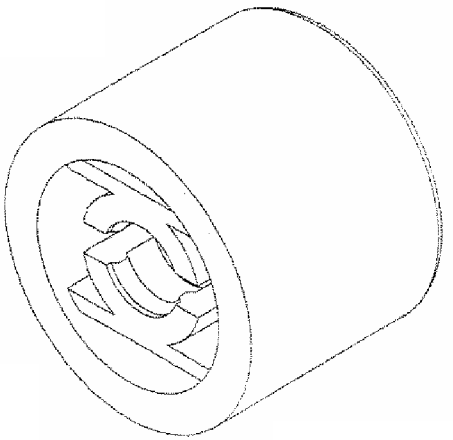

xx	Color
03	orange
04	blue
05	black
06	green
07	grey
08	yellow
09	red
10	white

Material: ABS, UL94HB, E56070

RoHS-conform 2002/95/EC

Tolerances: 0.00: ±0.05mm 0.0: ±0.10mm	Date	Name	KM 4xx
	04/09	dr	
knitter-switch	30 17 67	Page 1/1	
Modifications / Date / Name			