TN2445

TN-150KLBM12-MFRKG/US/ /V

Temperature sensors

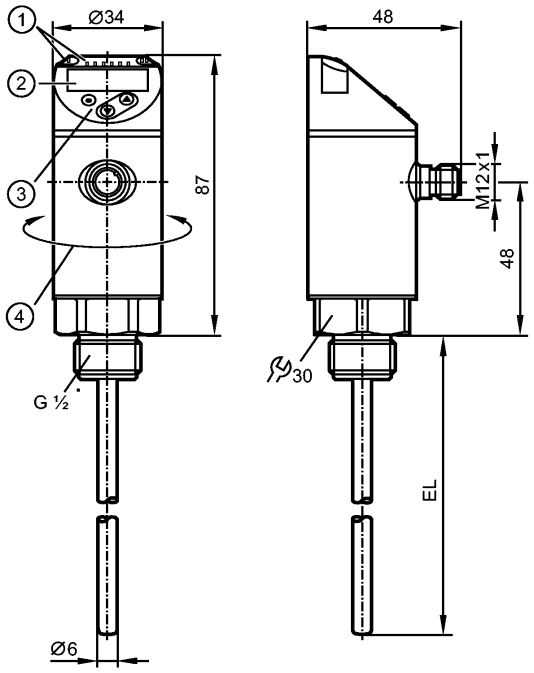

1: LEDs (display unit / switching status)
2: 4-digit alphanumeric display / alternating indication of red and green
3: Programming buttons
4: Upper part of the housing can be rotated by 345°

Product characteristics		
Electronic temperature sensor		
Process connection: G 1/2		
Installation length EL: 150 mm		
2 outputs OUT1 = switching output OUT2 = switching output or analog output		
4-digit alphanumeric display		
Measuring range: -50...150 °C / -58...302 °F		
Measuring element: 1 x Pt 1000, to DIN EN 60751, class A		
Factory setting: -50...150 °C		
Application		
Application		liquids and gases
Pressure rating	[bar]	250
Electrical data		
Electrical design		DC PNP/NPN
Operating voltage	[V]	18...32 DC; cULus - Class 2 source required
Current consumption	[mA]	< 50
Protection class		III
Reverse polarity protection		yes
Outputs		
Output		2 outputs OUT1 = switching output OUT2 = switching output or analog output

efector600

TN2445

TN-150KLBM12-MFRKG/US/ /V

Temperature sensors

Output function		2 x normally open / closed programmable or 1 x normally open / closed programmable + 1 x analogue (4...20 mA / 0...10 V)	
Current rating	[mA]	250	
Voltage drop	[V]	< 2.5	
Short-circuit protection		yes (non-latching)	
Overload protection		yes	
Max. load	[Ω]	4...20 mA: 500	
Min. load	[Ω]	0...10 V: 2000	
Measuring / setting range			
Measuring range		-50...150 °C	-58...302 °F
Factory setting		-50...150 °C	
Setting range			
Set point, SP		-49.8...150 °C	-57.6...302 °F
Reset point, rP		-50...149.8 °C	-58...301.6 °F
Analog start point, ASP		-50...145 °C	-58...293 °F
Analog end point, AEP		-45...150 °C	-49...302 °F
in steps of		0.1 °C	0.1 °F
Resolution			
Switching output	[K]	0.1	
Analog output	[K]	MS / 4096 *) | MS / 3561 **)	
Display	[K]	0.1	
Accuracy / deviations			
Switch point accuracy	[K]	± 0.3 + (± 0.1 % MS)	
Analog output	[K]	± 0.3 + (± 0.1 % MS)	
Display	[K]	± 0.3 + (± 0.1 % MS)	
Temperature coefficients (in % of the span per 10 K)		0.1	
Reaction times			
Power-on delay time	[s]	1	
Dynamic response	T05 / T09 [s]	1 / 3 ***)	
Integrated watchdog		yes	
Software / programming			
Programming options		hysteresis / window function; NO / NC; output polarity; on delay, off delay; damping; display unit; current / voltage output	
Interfaces			
IO-Link Device			
Transfer type		COM2 (38.4 kBaud)	
IO-Link revision		1.1	
Environment			
Ambient temperature	[°C]	-25...80	
Storage temperature	[°C]	-40...100	
Protection		IP 67	
Tests / approvals			
EMC		DIN EN 61000-6-2 DIN EN 61000-6-3	
Shock resistance		DIN IEC 68-2-27:	50 g (11 ms)

TN2445

TN-150KLBM12-MFRKG/US/ /V

Temperature sensors

Vibration resistance	DIN EN 60068-2-6	20 g (10...2000 Hz)
MTTF [Years]	207	
UL approval number	K015	

Mechanical data

Process connection	G 1/2
Materials (wetted parts)	stainless steel (316L / 1.4404); O-ring: FKM
Installation length EL [mm]	150
Housing materials	stainless steel (316L / 1.4404); PBT+PC-GF 30; PBT-GF 20; PC

Displays / operating elements

Display	Display unit 2 x LED green Switching status 2 x LED yellow 4-digit alphanumeric display / alternating indication Measured values of red and green

Electrical connection

Connection: M12 connector; gold-plated contacts

Wiring

Core colors

BK	black
BN	brown
BU	blue
WH	white



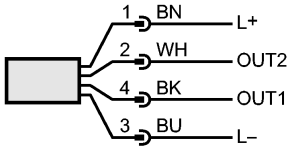

OUT1: switching output or IO-Link
OUT2: switching output or 4...20 mA / 0...10 V
Colours to DIN EN 60947-5-2

Remarks

Remarks:
*) current output
**) voltage output
***) according to DIN EN 60751
MS = set measuring span
The values for accuracy apply to flowing water.

Pack quantity [piece]	1